Participant Handbook

Fishing Tools Applications

Drilling & Workover Training Division
June 2019

FISHING TOOLS APPLICATIONS

PARTICIPANT HANDBOOK

CHANGE DATE	REASON
June 2019	First Issue

Terminal Objective

On completion of this course, participants will be able to identify fishing tools applications general guidelines and rules and describe fishing, milling, and cutting tools types, applications, and operations.

Enabling Objectives

1. Identify fishing tools applications general guidelines and rules.

2. Describe fishing tools types, applications, and operation.

3. Describe milling tools types, applications, and operation.

4. Describe cutting tools types, applications, and operation.

INTRODUCTION

Losing equipment in the hole is expensive and potentially dangerous. Drilling must come to a halt until the equipment is recovered, or the hole must be sidetracked. Also, the well can become hard to control with essential tools out of reach, increasing the risk of a blowout. Fishing, or recovering lost or stuck equipment in the hole, is therefore a critical procedure at any drilling operation.

The purpose of this course is to educate drilling rig operations personnel on the application of fishing, milling, and cutting tools. The course covers the tools' types, their applications, and operation.

Each of the above enabling objectives is covered in a section. Review exercises are located at the end of each section.

PART 1	**OBJECTIVE 1**

Identify Fishing Tools Applications General Guidelines and Rules

When a fishing job develops, all drilling progress ceases and tools and procedures must be utilized to remove the fish. Failure to recover the fish can require re-drilling or even abandoning the well.

Factors that should be considered when planning a fishing job include:

- The mechanical condition of the wellbore tubulars and the fluids or solids that they contain.
- Knowledge of the size, amount, and type of fish (all dimensions are important).
- Location of the fish.
- Predicted cost, probability of success, and risks of failure.

Each fishing job is unique; the tools and techniques needed to fish a string of stuck pipe from one well may not work at another well or under other conditions at the same well. For this reason, there are general guidelines and rules for fishing operations. These are:

- Evaluate
- Communication
- Gather Information
- Fishing Rules

EVALUATE

Evaluate the situation. What is in the hole and where is it? What are the chances of fishing it out? Evaluate the well records and field history. Gather ideas from the fishing-tool supervisor, tool pusher, drilling/production supervisor, engineer, and drillers. Examine alternative approaches.

Always use safe and proven practices. There may be several workable options on a given job, but a proven method offers the fewest surprises. Also, think about how each step (successful or not) would affect the next one. It is also critical to keep track of what goes into the hole, how it is used, and the results of each run.

COMMUNICATION

Communication is key to success. The following steps should be taken prior to and during a fishing job. The obtained information should be shared with all parties involved in the job:

- Collect complete and accurate information about the situation.
- Notify the fishing-tool company personnel with enough time to allow them to research the problem, ship the proper tools, and prepare for alternative approaches.
- Ensure that all parties involved understand the situation and agree upon the procedures to be used.
- As the job progresses, keep all parties fully informed. Provide progress reports on topics including fishing success, problems encountered, analysis of those problems, alternative plans developed, and additional equipment needed.

GATHER INFORMATION

It is extremely important to record data completely and accurately. If additional data would be useful, it should be acquired. When it becomes necessary to fish drilling equipment out of the hole, you need to find out as much as possible about the situation before taking action. Among the questions you should try to answer are the following:

- What is to be fished out of the hole?
- Is the fish stuck, or is it resting freely?
- If stuck, what is causing it to stick?
- What is the condition of the hole?
- What are the size and condition of the fish?
- Could fishing tools be run inside the fish, or must they be run outside it?
- Could other tools be run through the fishing assembly that is to be used?
- Are there at least two ways to get loose from the fish if it cannot be freed?

List key factors to be considered, as well as information to be gathered and recorded during a fishing job. Record outside diameters (ODs), inside diameters (IDs) length of fishing string and make drawings. Pay special attention to all IDs, drill pipe tube IDs, connection IDs and all tools run in the bottom hole assembly. They may require ball or wire line tools to be run through them. Also:

- Discuss the job thoroughly with all personnel concerned.
- Know the limitations of the drill pipe and tools on each job.
- Ensure that you have an accurate weight indicator.
- Locate the top of the fish using either wellbore records (e.g., a packer), a collar, or a free point.

- Pipe may show to be free in stretch (reciprocation) but not free in torque (rotation). Torque free point is recommended for open-hole fishing.
- Always leave one or two joints of free pipe above the stuck point when backing off. This will make getting over the top of the fish much easier.
- If the free point is within approximately I00ft of the bottom of the casing in open hole, back off up into the casing. It may be impossible to get over the fish if equipment is backed off in an open-hole section below a casing shoe.
- Determine the depth and condition of the hole and the size of tool joints. These measurements will determine how much back torque it will take to back off a tool joint.
- If string-shot equipment is not available, consider mechanical backoff only as a last resort.

FISHING RULES

The most important fishing rules are:

- Keep track of pipe tallies
- Do not rotate the fishing string
- Do not overpull the string

Keep Track of Pipe Tallies

Always be aware of the pipe count on a fishing job if it is necessary to lay down pipe. Avoid mixing pipe or drill collars used for fishing with extra pipe on location. A joint count should always be tallied and recorded. Some experienced fishing-tool operators call this process out-and-in fishing. Always measure and total all items laid down and measure and total all items picked up. The difference in the totals will equal the amount necessary to pick up or lay down to tag the top of the fish. This serves as a double check if there is difficulty locating the top of a fish.

Do Not Rotate the Fishing String

To speed up a trip with a drilling string or work string, the pipe in the hole is frequently rotated to un-screw the connection. During fishing operations, however, this practice is unacceptable because the fish may be lost. Spinning a fishing tool such as an overshot, spear, magnet, junk basket, or washover pipe frequently causes the fish to be released back into the hole.

Do Not Overpull the String

When the fishing string is stuck, you need to consider the yield strength of all fishing string and the fish as well.

EXERCISE A

Directions: Choose the correct response for the following questions:

1. What are the factors that should be considered when planning a fishing job (select all correct answers)?

   a. The mechanical condition of the wellbore tubulars and the fluids or solids that they contain

   b. Knowledge of the size, amount, and type of fish

   c. Location of the rig

   d. Predicted cost, probability of success, and risks of failure

2. Most of the fishing jobs are analogical; the tools and techniques needed to fish out a junk from the well might work in every fishing job.

   True False

3. When the fishing string is stuck, you should do the following (select all correct answers):

a. Notify all concerned parties
b. Rotate the string to free the stuck
c. Consider the yield strength of all fishing string and the fish as well
d. Over pull the string

4. If you are in charge of a fishing job, what are the questions you need to answer before attempting fishing?

a. What is to be fished out of the hole?

b. What are the size and condition of the fish?

c. Could fishing tools be run inside the fish, or must they be run outside it?

d. All of the above

PART 2	**OBJECTIVE 2**

Describe Fishing Tools Types, Applications, and Operation

Fishing requires specialized equipment and expertise. Some may require operators from fishing equipment/service companies to be brought to the well site for troublesome fishing jobs.

Fishing jobs are grouped into five categories with each having its special tools (figure 1):

- Internal Catch
- External Catch
- Jarring Tools
- Junk Catch
- BHA Design

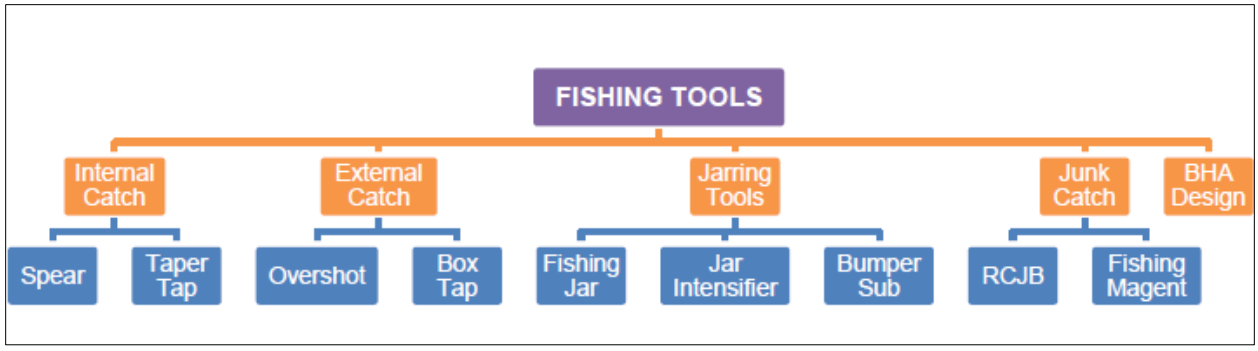

Figure 1
Fishing Methods and Related Tools

INTERNAL CATCH

An internal catch operation may use spear and taper tap tools.

Spear

The releasing spear (figure 2) is a superior fishing spear which is designed to assure positive internal engagement with the fish. It is ruggedly built to withstand severe jarring and pulling strains. It engages the fish over a large area without damage to the fish. The simple design eliminates any small parts which could become lost or damaged in the hole. If the fish cannot be pulled, the spear may easily be released and re-engaged or withdrawn.

Application

The releasing spear is used to internally engage and to retrieve all sizes of tubing, drill pipe and casing. It may be used in conjunction with cutters, spear pack-offs and other tools, where this is desirable.

Figure 2
Releasing Spear

Components

The releasing spear consists of a mandrel, grapple, release ring and nut (figure 3). The mandrel may be either a flush type (figure 3) or a shoulder type (figure 2).

The flexible one-piece grapple has an internal helix matching the mandrel helix. The tang of the grapple rests against a stop on the mandrel when the spear is in the engaged position. The large engaging surface of the grapple permits heavy jarring and pulling strains without distorting the fish.

The helix of the mandrel ends at the point where the release ring is mounted.

The cam of the release ring matches the cam on the face of the nut. The matching cams of the release ring and the nut are a safety device which resists locking or freezing assuring an easy release.

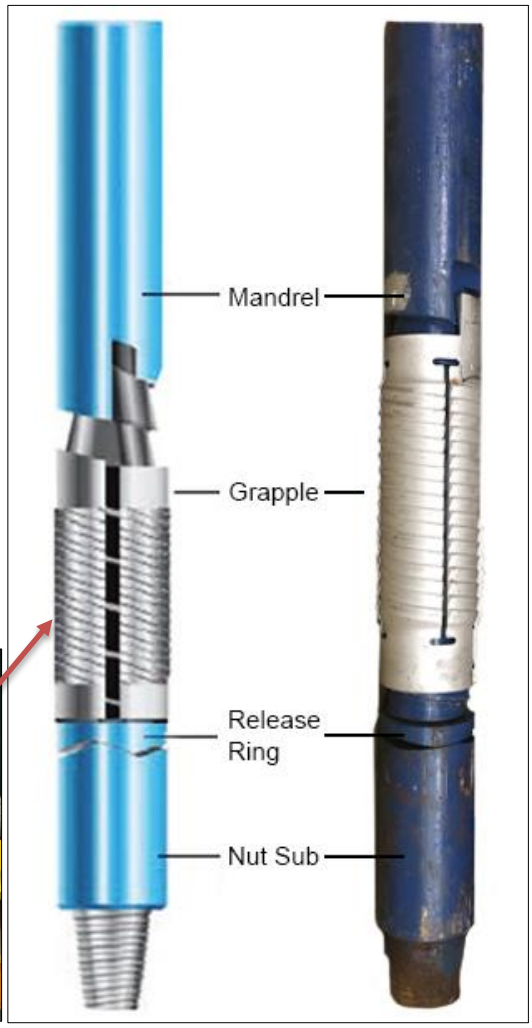

Figure 3
Releasing Spear Components

Operation

To Engage and Pull the Fish

- Lower the fishing string slowly until the spear has entered the fish to the desired depth.
- Rotate one full turn to the left, then pull the fish by elevating the fishing string.
- As the fishing string is rotated to the left, it turns the mandrel down through the grapple, putting the grapple in engaging position.
- A straight pull will then wedge the grapple into positive engagement with the fish.

To Disengage from the Fish

- Bump down with the weight of the fishing string to break the engagement.
- Rotate two to three turns to the right, then elevate the string until the spear is out of the fish. This moves the mandrel upward through the grapple, forcing the grapple down against the release ring and putting the spear in the released position.
- If the spear does not release, bump down, then simultaneously rotate to the right while slowly elevating the fishing string until the spear is clear of the fish.
- Always bump down with the full weight of the fishing string before the releasing operation.

Accessories

Spear Pack-Off Assembly

The spear pack-off assembly (figure 4) is attached to the sub type nut below the spear to pack off the fish in order to circulate through the fish. The spear pack-off assembly consists of an adapter sub, packer thimble, packer and mandrel. The adapter sub of the spear pack-off has a box connection to match the pin connection of the sub type nut on which it is to be used. The mandrel of the spear pack-off may be plain bullnose or with a pin connection for attachment of other tools.

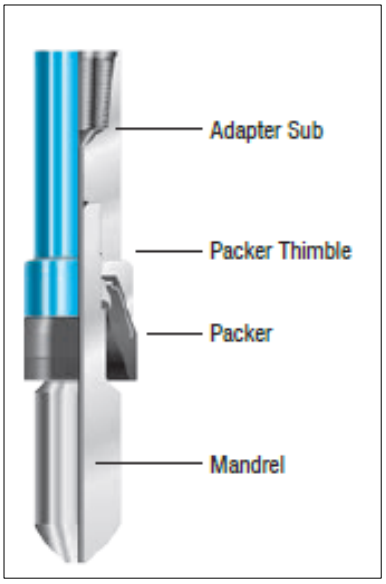

Figure 4
Spear Pack-Off Assembly

Sub Type Nut

If it is desired to run a spear pack-off assembly or an internal cutter below the spear, install a sub type nut (figure 5) in place of the bullnose nut. The sub type nut is used in place of the standard bullnose nut to provide the connection required to utilize other tools below the spear. Such as the spear pack-off or internal cutters.

Figure 5
Sub Type Nut

Aramco Stock (the most used)

Figure 6 shows the most used spear parts Aramco stock numbers and dimensions. The first column on the left specifies the part. The top two rows on the right of the 1st column, indicate the OD and ID of the “H” part. The columns below the top 2 rows give the part numbers for each dimension starting from top to bottom.

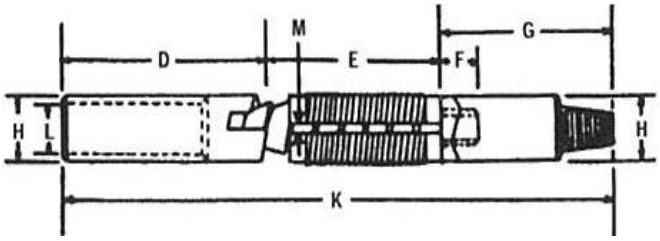

Flush Type

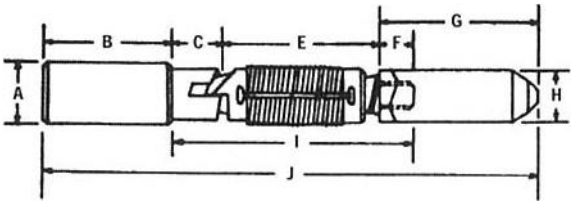

Shoulder Type

Spear OD (H)	1-1/8	1-7/8	2-5/16	2-13/16	2-1/2	3-5/8	4-1/32	5	5-11/16	7-1/4	8-1/4
Spear ID	0	3/8	3/8	1/2	1/2	3/4	1	1	2	2-3/4	2-13/16
Flush type mandrel part #	11196	17229	17232	9411	9946	17476	9681	17235	9267	9381	17247
Shoulder type mandrel part #	11196	17229	17232	9411	9946	17476	9681	17235	9267	9381	17247
Grapple part #	11197	17230	17233	9412	9947	17477	9682	17236	9268	9382	17248
Release rig part #	11198	1347	1229	1584	9948	13183	1336	9718	9279	9383	9286

Bullnose part #	11199	1346	1228	9413	9949	13184	1335	9719	9269	9384	9284
Sub type nut part #	11199-B	1346-B	1228-B	9413-B	9949-B	13184-B	1335-B	9719-B	9269-B	9384-B	9284-B

Figure 6
Flush and Shoulder Type Spears Dimensions and Stock Numbers

Taper Taps

Taper taps are simple, rugged, internal catch fishing tools (figure 7). A taper tap is not releasable. The normal taper per foot on Aramco stock is ¾" taper per foot (TPF).

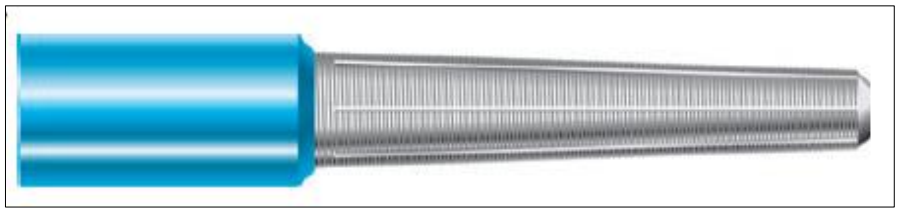

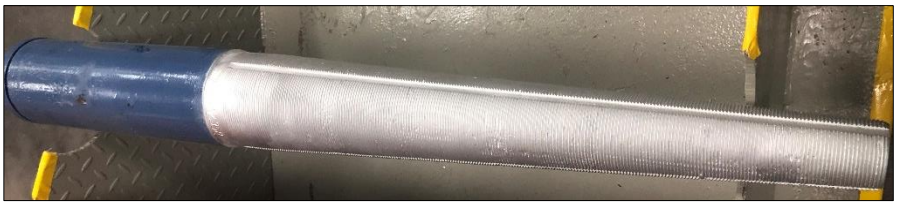

Figure 7
Taper Tap

Application

Taper taps are applicable when the fish is free or when the ID of the fish is unknown. The taper tap can engage a larger range of fish ID's in the same run.

Operation

- Run the taper tap in the hole to the top of the fish.
- Apply less than one point of weight, and rotate the tap until the tapered threads have engaged the fish.
- Stop rotation and pull the fish from the hole.

Aramco Stock

The following table lists Aramco stock for the most used taper taps:

CTACH FROM	TO
2 ½”	4 ¾”
2 ½”	5 ½”
3 ½”	5 ¾”
3”	6”
4 ½”	6 ¾”
4 ½”	7”

EXTERNAL CATCH

An external catch operation may use overshot and box tap tools.

Overshot

The overshot (figure 8) is the most common external catch tool and the most popular of all fishing tool. Overshot is used to engage the fish from the outside diameter and retrieve the fish.

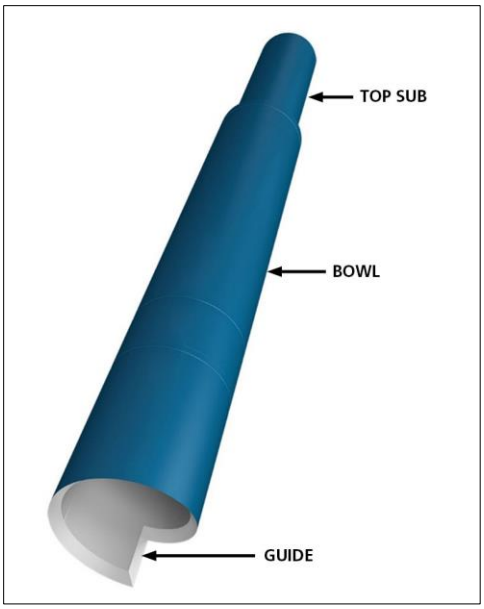

Figure 8
Overshot

Application

Overshot is used when adequate clearance allows the overshot to be ran in the well and engage the fish. Also, allow slick line or wireline to be used to pass top of the fish and go deeper into the fish to perform any required job.

Components

Overshot is composed of three out-side parts; the top sub, bowl, and guide (figure 8). The top sub connects the overshot to the fishing string. The bowl may be fitted with different types of equipment to grasp the fish and different guides to help center the fish beneath the tool.

The basic overshot may be dressed with either of two sets of internal parts, depending on the size of the fish if it is near maximum catch size for the particular overshot or the fish diameter is well below the maximum catch size.

If the diameter of the fish is close to the maximum catch size for the overshot, a spiral grapple, spiral grapple control, and type A packer are used (figure 9).

A spiral grapple is formed as a left-hand helix with a tapered exterior conform to the helically tapered section in the bowl. Its interior is wickered for engagement with the fish.

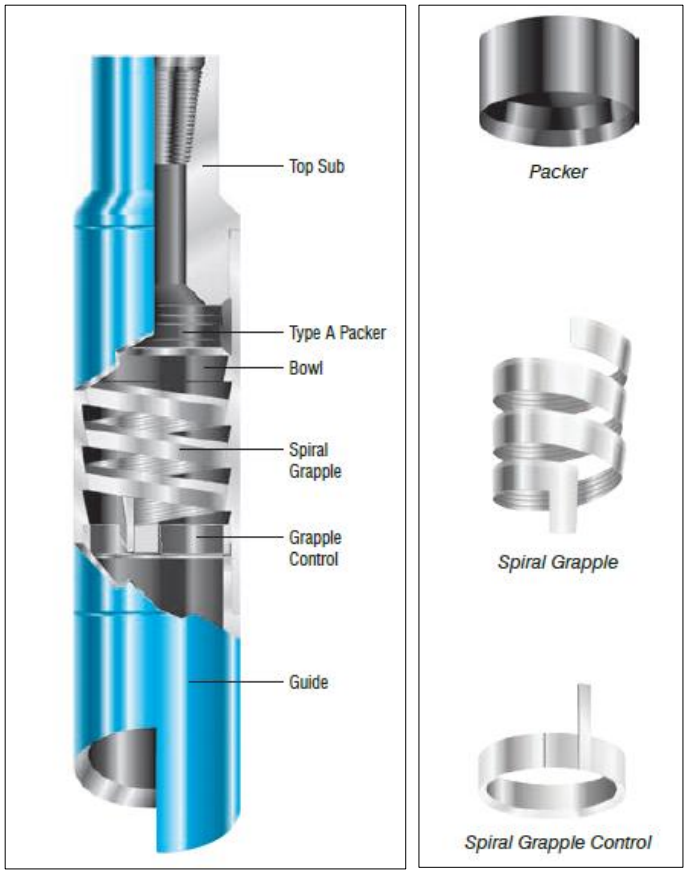

Figure 9
Overshot with Spiral Grapple

If the fish diameter is well below the maximum catch size, a basket grapple and mill control are used (figure 10). The basket grapple assembly made up with a mill control packer can be used to dress the top of a mildly distorted or burred fish so that it can be caught firmly by the grapples. Both types of packers seal around the fish, allowing drilling fluid to be pumped down to clean out the bottom of the hole.

A spiral grapple is formed as a left-hand helix with a tapered exterior conforms to the helically tapered section in the bowl. Its interior is wickered for engagement with the fish.

A basket grapple is an expandable cylinder with a tapered exterior that conforms to the helically tapered section in the bowl. Its interior is wickered for engagement with the fish.

Grapple controls are of two types: Spiral and basket controls. They are used as a special key to allow the grapple to move up and down during operation while simultaneously transmitting full torque from the grapple to the bowl.

Figure 10
Overshot with Basket Grapple

Spiral grapple controls are always plain. Basket grapple controls may be either plain or include a packoff. In addition to the packoff, mill teeth are included.

The packer is a rubber ring having a molded lip. As the overshot is lowered over a fish, the inner lip of the rubber will seal off around the fish and direct the mud down through the fish.

Operation

Gripping and Releasing Mechanism:

The bowl of the overshot is designed with helically tapered spiral section on its inside diameter. The gripping member (spiral grapple or basket grapple) is fitted into this section. When an upward pull is exerted against a fish, an expansion strain is spread evenly over a long section of the bowl and the compression strain is spread evenly over a long section of the fish. No damage or distortion occurs to either the fish or the overshot.

Engaging and Pulling the Fish with the Overshot:

- Run the fishing string to within a few feet of the top of the fish.
- Start circulation to clean cuttings and settlings off the top of the fish and to clean out mud cake that may have accumulated inside the overshot.
- Lower the fishing string slowly to touch the top of the fish and establish its exact depth.
- Mark the position on the kelly when the hook load decreases indicating the fish has been tagged.
- Raise the string slightly.
- Lower the string slowly without circulation, with slow rotation to the right. If the overshot is centered over the fish, the lowering and right-hand rotation of the string forces the grapple upward within the tapered helix of the bowl, allowing the grapple to expand and the fish to enter the overshot (figure 11).

- Lower the mark on the kelly to the measured distance from the bottom of the overshot to the inside stop. The weight indicator should register a decrease.
- Stop rotation and relieve all torque in the string once the fish is engaged.
- Take an upward strain for the fish to pull the grapple downward and the wickers on the grapple to bite into the fish. If the fish is gripped tightly, the weight indicator will show an increase.

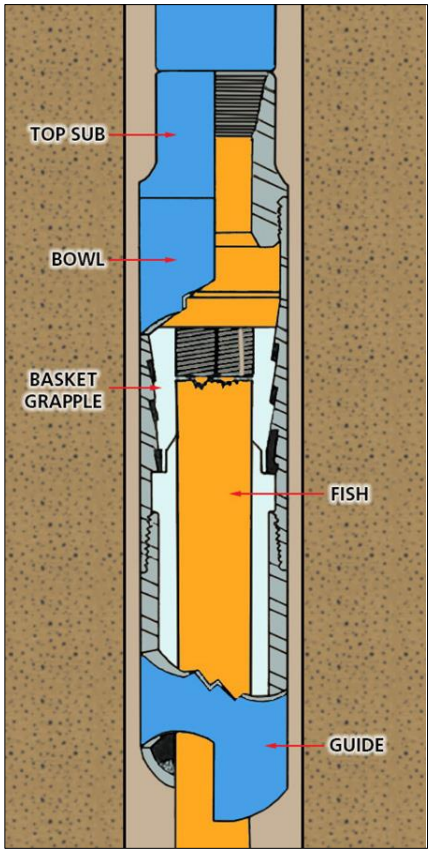

Figure 11
Overshot Engaging Fish

- Start circulation without rotation to clean out the hole before the fish is brought to the surface.
- Break out stands of pipe while coming out of the hole. The string is not rotated because that might back the fish out of the overshot.
- Release the fish from the overshot, when the top of the fish is pulled through the rotary table, by bumping down against the rotary slips to break the grip of the grapple.
- Rotate the fishing string to the right and raise it gradually until the overshot is clear of the fish.

Many fishing jobs take hours of patient lowering, raising, turning, and feeling with the fishing assembly before the fish is caught. Under these conditions, the measurements taken at the surface pay off. They help determine whether the tool is hitting the top of the fish, the grapples are holding, or the top of the fish is being bypassed.

If an overshot of the proper size has been run and the fish has been bypassed, then the top of the fish is probably in a washed-out section of the hole or behind an obstruction. The top of the fish may also be so badly damaged that the grapples cannot engage it.

Accessories

Oversize Guide:

The standard guide (figure12) furnished with an overshot has the same outside diameter as the bowl of the tool.

Figure 12
Standard Guide

If the hole size in which the overshot must be operated is so large that the overshot might pass along one side of the fish and down past the top of the fish, an oversized guide (figure 13) should be installed in place of the standard guide. The oversized guide will contact the fish and bring it into alignment for entry into the bowl of the overshot.

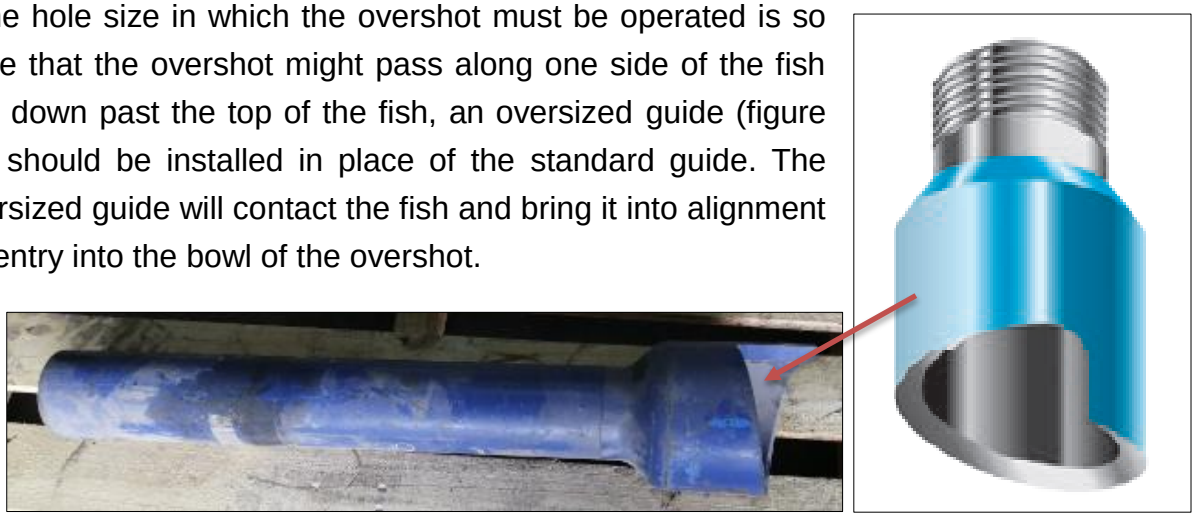

Figure 13
Oversize Guide

Wall-Hook Guide:

If the top of the fish is in a washed-out section of the hole, a wall-hook guide may be used in place of the regular guide on the bottom of the overshot (figure 14). The wall-hook guide provides the means to move the fish into the center of the drilled hole.

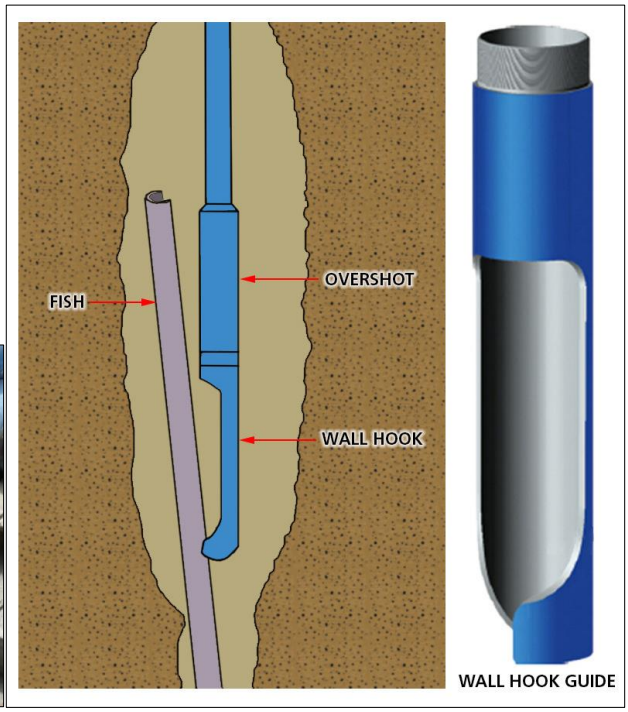

Figure 14
Wall-Hook Guide

Fishing steps with the wall-hook guide:

- Measure the distance from the bottom of the guide to the top of the wall-hook opening and from there to the stop in the overshot.
- Run the string to a point just above the fish. Lower with slow rotation until the guide tags the fish.
- Stop downward movement, but continue rotation. Torqueing up of the fishing string is a sign that the fish is caught in the wall-hook opening.
- Lock the rotary table and raise the fishing string. A release of torque signals that the top of the fish has slipped beneath the top of the wall-hook opening and is centered beneath the overshot,

- Lower the string the approximate distance from the top of the wall-hook opening to the stop inside the overshot to engage the fish. If the indicated weight of the fishing string decreases, the fish is caught and can be retrieved.

Extension Sub:

If the upper end of the fish cannot be engaged, an extension sub is installed between the top sub and the bowl of the overshot to allow the damaged top of the fish to go past the grapple (figure 15). The overshot can then be lowered far enough to engage an undamaged area of the fish, such as the next lower tool joint.

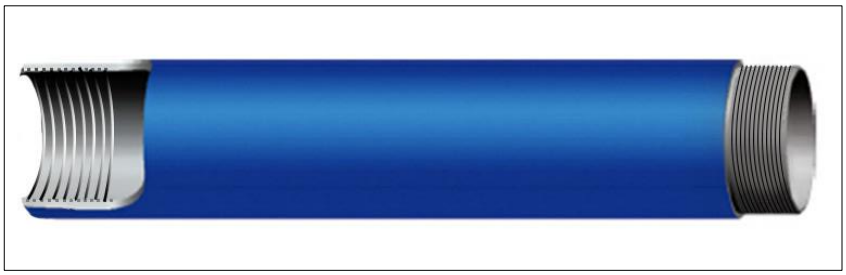

Figure 15
Extension Sub

Aramco Stock

The following table lists Aramco stock of overshot (the most common used):

Overshot OD	Type
3 5/8	F.S*
3 ¾	S.H**
5 5/8	S.H or F.S
5 ¾	S.H or F.S
5 7/8	S.H or F.S
8 1/8	F.S or S.H
11 ¾	F.S
12 ¾	F.S
13 ¾	F.S

*F.S. (Full Strength) Engineered to withstand all pulling, torsional and jarring strain.

**S.H. (Slim Hole) Engineered to withstand heavy pulling strains only.

Box Tap (Die Collar)

Box tap or die collars (figure 16) are simple, rugged, dependable external catch fishing tools.

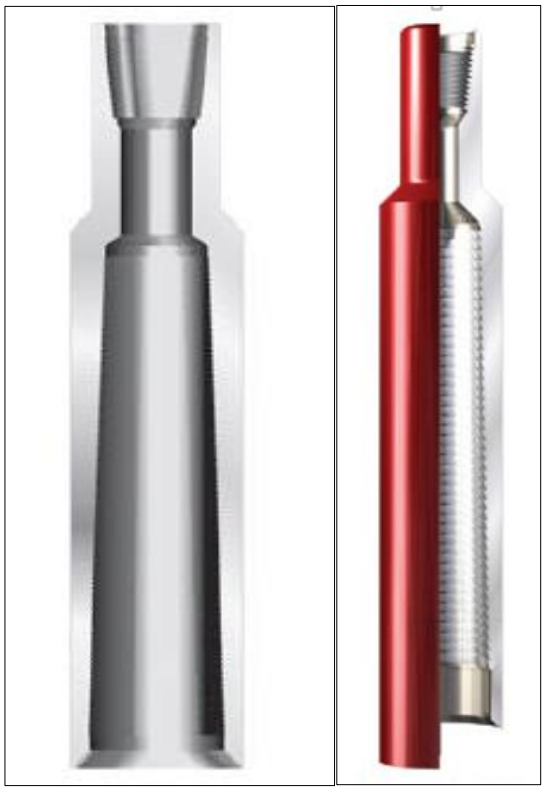

Figure 16
Box Tap or Die Collars

Application

Box taps are applicable when the fish is free or when the OD of the fish is unknown. The box tap can engage a larger range of fish OD's in same run.

Operation

- Run the die collar in the hole to the top of the fish.
- Apply less than one point of weight and rotate the die collar until the tapered threads have engaged the fish.
- Stop rotation and pull the fish from the hole.

Aramco Stock

The following table lists Aramco stock for the most common used die collars:

Die Collars OD	Catch Range
3 7/16	2 9/16 X 1 ¾
4 ¾	3 ½ X 2
5 7/8	4 7/8 X 3 ¾
8 ¼	7 X 5 1/8

JARRING TOOLS

Jarring tools are used to strike heavy blows upward or downward when the fish is stuck.

Fishing Jar

The fishing jar is a straight-pull operated jar which employs a combination of hydraulics and mechanics principles.

No setting or adjustment is required before going in the hole, or after the fish has been engaged. The fishing jar allows the operator to control the intensity of the jarring blow within a wide range, from a very light impact to a blow of very high impact.

When used in fishing operations, a fishing jar should be installed immediately below a string of drill collars. For maximum effectiveness of jarring, a jar intensifier should be installed in the fishing string. The intensifier should be located in the fishing string about four drill collars above the Jar. The intensifier works in conjunction with the fishing jar to positively ensure that the downward jarring blows are concentrated at the stuck point.

Application

Fishing jars are applicable when the fish is engaged and gets stuck or is already stuck. There are several reasons that the fishing string can get stuck.

Junk dropped in the hole is one type of becoming mechanically stuck. Any foreign objects or tools falling into the hole can wedge the bottom hole assembly (BHA) and stick to the pipe.

Stuck downhole tools are another type of becoming mechanically stuck like packers or plugs which have retrievable mechanisms.

Poor hole cleaning during a long section of milling operations may cause the debris to accumulate around the drill string and get stuck.

Bent pipe is also one way of getting the string stuck when dropped into the well. The sudden impact of the string stopping after being dropped causes the pipe to bend.

Components

The fishing Jar (figure 17) consists essentially of a mandrel-piston assembly which slides within a cylinder assembly. The mandrel-piston assembly is composed of a mandrel (or top sub), piston assembly, washpipe, knocker and seal ring assemblies.

The cylinder assembly is composed of a mandrel body, middle body, washpipe body, fill plugs and seal assemblies.

The seal assemblies which are located in high differential pressure areas, are composed of a standard O-ring seal, a seal protector ring and a non-extrusion ring. Where the seal is subject to high pressure in both directions, two seal protector and two non- extrusion rings are utilized with the O-ring seal.

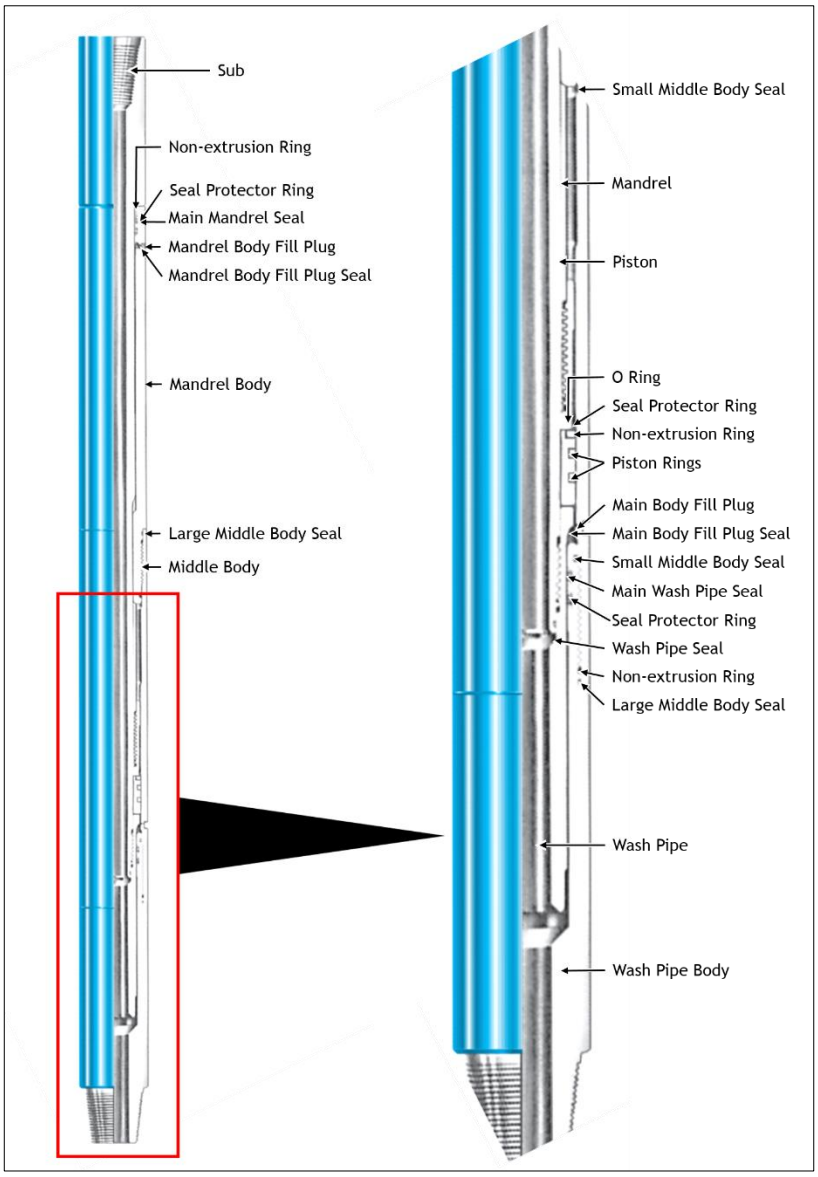

Figure 17
Fishing Jar

The piston assembly is composed of a piston, (2) piston rings, a seal, a non- extrusion ring and a seal protector ring. When the piston is properly assembled in the jar, the piston is located between the shoulders of the washpipe upper end and the knocker or mandrel lower end. The piston must be assembled with its O ring seal (ID) nearest its upper end and the by-pass relief ports above the piston rings. The seal non-extrusion ring will be located below the seal, toward the washpipe

Operation

To strike the initial blow, raise the string sufficiently to take the stretch needed to produce the required impact; set the brake and wait for the jar to hit. The first blow may take from a few seconds to several minutes, depending on circumstances. The variables are depth of operation, amount of stretch in the string, whether an accelerator is used, downhole temperature and mechanical condition of the hole.

The operator should use caution in applying pull load to the jar, to not exceed the safe working load for the particular Jar being used. Especially on the first pull, the tendency is to speed the action by applying additional load. Determine the maximum safe working load for the jar (based on the Calculated Strength Chart), and never exceed this load during operation.

The velocity and the relative impact load of the blow is controlled by the amount of stretch taken in the running string and the weight of the drill collars installed above the jar.

After a stroke has been made, it is only necessary to close the jar and then to take the necessary stretch in the string to strike the next blow.

Operational difficulties are sometimes encountered while jarring, some of which are listed below along with corrective procedures.

1. If the blows being struck are not as heavy as desired:

    a. Be sure that the jar is fully closed.

    b. Pull the running string up faster.

c. Increase the number of drill collars installed above the jar.

d. Install a jar intensifier (figure 18) above the drill collar.

2. If unable to hit the second blow:

a. Lower the string farther, as the Jar is probably not closing sufficiently.

3. If not able to hit the first blow:

a. Pull up to the desired stretch in the string and set the brake. Hold this position until the Jar strikes its blow.

b. Increase the tension in the running string if possible, but do not exceed the allowable working load on the Jar.

Aramco Stock

The following table lists Aramco stock for the most common used fishing jars:

Fishing Jar OD	Fishing Jar ID
3 ¾	1 ½
4 ¾	2
6 ¼	2 ¼
7 ¾	3 1/16

Jar Intensifier

The intensifier, also called accelerator, is an accessory run in the jarring string.

Application

The intensifier is run in conjunction with the fishing Jar. Its purpose is to supply acceleration to the collars and the upper portion of the hydraulic rotary jar during its (jarring) free stroke. Each jar intensifier is designed to match a corresponding fishing jar. The jar intensifier is essentially a hydraulic fluid spring which stores energy when a strain is pulled on the running string. When the strain is removed by the free stroke of the jar, this stored energy is released, accelerating the drill collars and jar upward until a blow of high impact is struck.

Components

The jar intensifier (figure 18) is composed essentially of a mandrel assembly (or top sub and mandrel), mandrel body insert, mandrel body, middle body, washpipe body, washpipe, knocker and piston assembly. The tool is completely filled between the mandrel body insert and washpipe body, with silicone fluid of high compressibility index.

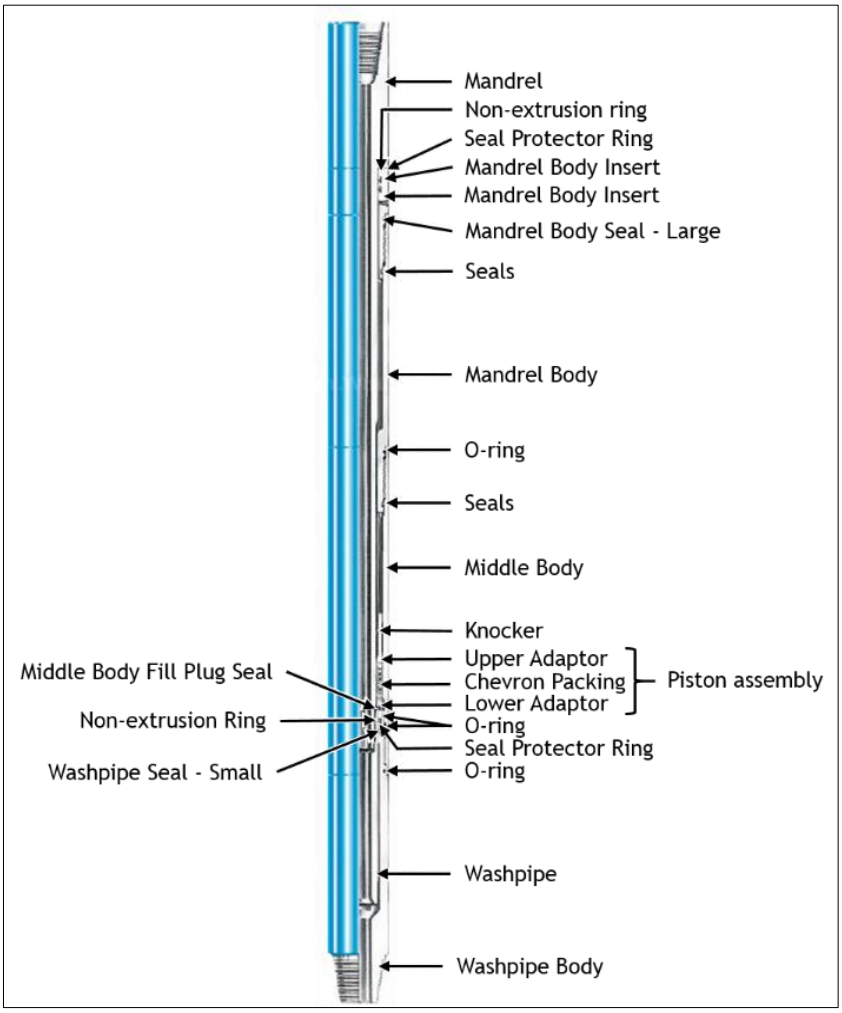

Figure 18
Jar Intensifier

The mandrel has a ruggedly built splined section near its lower end, which is always engaged with matching splines in the lower end of the mandrel body. This allows torque to be transmitted in either direction and at all times, whether open, closed or in any position of stroke.

The high pressures produced within the jar intensifier during operation, are maintained by the same non-extrusion seal ring assemblies which are used in the hydraulic rotary jar. Use of these assemblies prevents rupture of seal rings, and keeps wear to an absolute minimum.

The piston assembly is composed of a top adapter, bottom adapter and a set of chevron packing rings, usually five rings per set. This piston assembly is assembled on the lower end of the mandrel, between the knocker and washpipe. The piston assembly is moderately pre-compressed at its ID against the mandrel and at its OD against the middle body. This forms a leak-proof, continuous, sliding seal.

Operation

The jar intensifier should be located in the running string immediately above the drill collars; just below the running string lower end. The jar should be located immediately below the drill collars and just above the fishing tools.

The sequence from the fish upward should be: fishing tool, bumper sub, fishing jar, drill collars, jar intensifier and running string.

The fishing operation should be run in conventional manner; the fish is engaged by the fishing tool, and a strain is pulled on the fishing string. This will cause the jar intensifier to stroke 6" to 13", depending on size compressing the hydraulic fluid and storing energy at the intensifier. This stored energy will cause the jar to operate. When the jar trips, the intensifier imparts its stored energy to the drill collars and jar mandrel in the form of acceleration, causing the jar to strike a blow of very high impact value.

In operation, the fluid is compressed as tension is applied by the running string by the travel upward of the piston in the middle body. When the jar reaches its free stroke and trips, the sudden release of stored energy in the intensifier accelerates the drill collars upward at tremendous and intensifying velocity.

When the jar reaches its maximum travel, a blow of high impact is delivered directly to the fish. The action is essentially independent of the running string. The intensifier tends to confine movement primarily to the drill collars, and does not rely on movement of the entire running string. This confines the impact of the jar and drill collars to the fish, where it is most effective and least damaging; regardless of depth. This procedure is repeated as many times as is required to free the fish

Aramco Stock

The following table lists Aramco stock of the most common used jar intensifiers:

Jar Intensifier OD
3 ¾
4 ¾
6 ¼
7 ¾

Fishing Bumper Sub

The fishing bumper sub is an inexpensive device for use in a fishing string. It is made of high grade, heat-treated alloy steels. It has the strength to perform sustained bumping operations with a minimum of maintenance.

Application

The fishing bumper sub is used in all types of fishing operations. Normally made up in the string just above the fishing tool and or safety joint, the fishing bumper sub can, at the will of the operator, deliver solid downward or upward blows.

The fishing bumper sub is used to release the fishing tool in the event it becomes impossible to pull the fish. The fishing bumper sub will deliver the sharp downward blow (and transmit the torque) that is required to release it from the fish.

Components

The fishing bumper sub (figure 19) consists of a mandrel, a mandrel body, middle body, knocker, top sub and seal assembly. All principal parts are manufactured of high strength, heat-treated alloy steel, enabling the tool to withstand the severe bumping, tension and torque to which it will be subjected.

The hexagon shaped mandrel fits into a correspondingly shaped mandrel body, where it is free to move up and down over its stroke while continuously cap- able of transmitting torque. The mandrel body joins the cylindrical middle body. The knocker, containing the packing rings, screws onto the top of the mandrel.

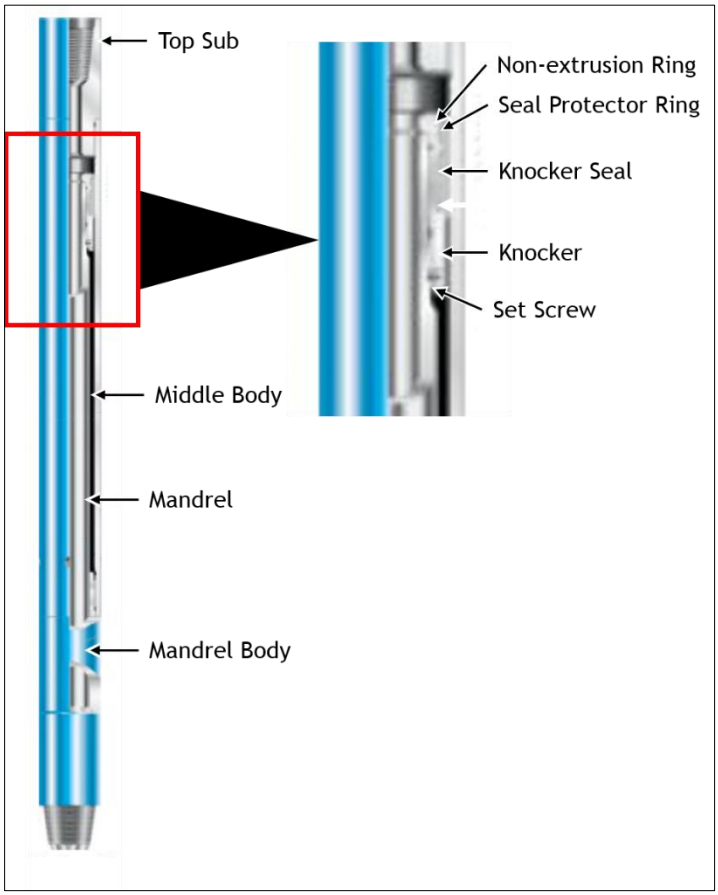

Figure 19
Fishing Bumper Sub

Operation

In Fishing Operations:

The fishing bumper sub is installed in the fishing string immediately above the fishing tool or safety joint. Its presence in the string enables the operator to release the fishing tool in the event it becomes impossible to pull the fish. The fishing bumper sub will deliver the sharp downward blow (and transmit the torque) that is required to release it from the fish.

To Bump Down in the Hole:

- Elevate the fishing string sufficiently to open the fishing bumper sub completely and to take a strain or stretch in the string. This will be the length of the stroke plus the permissible stretch in the fishing string.
- Drop the fishing string sharply (to within 6 inches of the closed position of the sub) and stop it abruptly with the brake. If sufficient stretch has been taken in the fishing string, this will cause the lower end of the fishing string to spring downward, closing the fishing bumper sub and, due to the elasticity of the string, deliver a series of downward blows to the tool below the sub.

Aramco Stock

The following table lists Aramco stock for the most common used bumper subs:

Bumper Sub OD
3 ¾
4 ¾
6 ¼
7 ¾

JUNK CATCH

Reverse Circulation Junk Basket (RCJB)

Reverse-circulation junk baskets use the hydraulic power of circulating drilling fluid to pick up junk (figure 20).

While being run into the hole, fluid circulates normally through the bottom to clean cuttings off the top of the fish. A ball dropped down the drill stem then reroutes circulation through jets on the side of the tool and back up through the bottom. Small pieces of debris are carried into the barrel, where folding fingers prevent them from dropping out. If made up with a mill shoe, a jet-powered or reverse-circulation junk basket can also cut and catch a core.

Application

Reverse circulation junk baskets are designed to effectively catch junk by utilizing the reverse circulation principle. Small junk objects may be successfully deflected/sucked into this junk basket and retrieved, which would not be fished out by other junk baskets. This junk may be such objects as rock bit cones and bearings, broken slips, bits of wire line, various hand tools, slivers and debris from twisted-off drill strings, milling cuttings, etc. Make sure that the inside diameters of the tool joints in the string are large enough to pass the steel ball.

Figure 20
Reverse Circulation Junk Basket

Components

Reverse circulation junk baskets consist basically of a barrel, a top sub, a junk catcher, a shoe, and a valve assembly. A lifting sub is provided for ease of handling the junk basket and provides a storage place for the steel ball (figure 21).

The reverse circulation is obtained by the unique construction of the barrel, which is actually a two-bowl assembly. With the steel ball in place in the valve seat, circulation fluid is directed around the valve through the inner passages of the barrel, is jetted outwardly and downwardly against the full circumference of the hole, flows in a continuous stream into the barrel, up through the barrel, then out the return ports at the upper end of the barrel

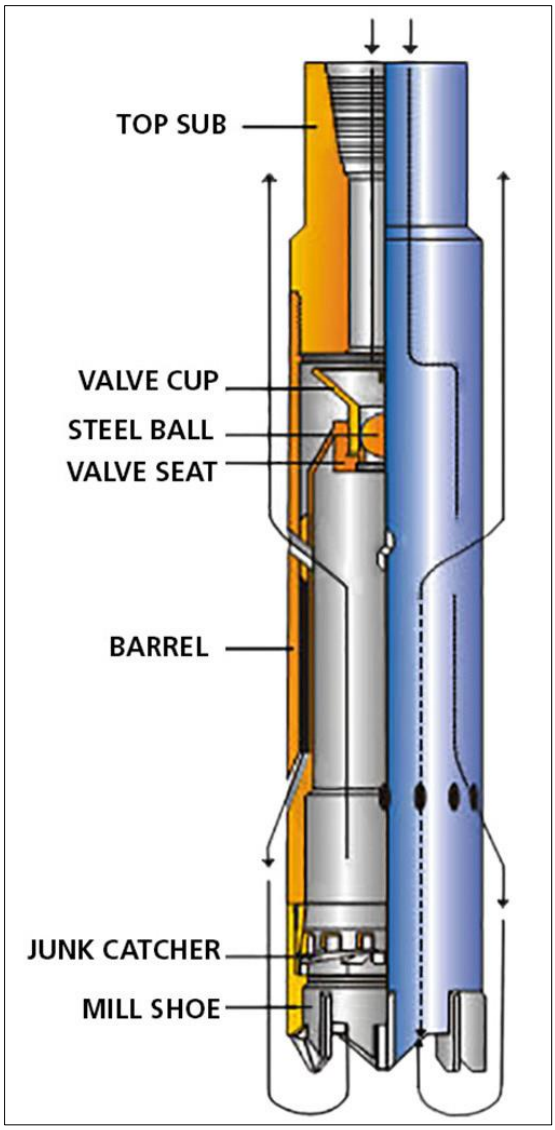

Figure 21
RCJB Components

Operation

Remove the lifting sub and retain it and the steel ball at the derrick floor. Using the top sub, connect the junk basket to the string and run it in the hole. If small junk particles are very prevalent in the hole, a junk sub should be installed on top of top sub.

To Recover Fish when RCJB is Equipped with Mill Type Shoe:

- When the junk basket is approximately ten feet off bottom, turn on the pumps and maintain circulation for a few minutes to condition the mud.
- Turn off the mud pumps.
- Break out the kelly from the string.
- Drop the steel ball down the drill pipe.
- Make up the kelly.
- Turn on the circulating pumps and while maintaining high pressure circulation, rotate the string slowly to the right and lower the junk basket to the bottom of the hole.
- Stop rotation and circulation and pull the junk basket from the hole.

To Recover Fish when Basket is Equipped with Finger Type Shoe:

- When the Junk basket is approximately ten feet off bottom, turn on the circulating pumps and maintain circulation for a few minutes to condition the mud.
- Turn *off* the pump.
- Break out the kelly from the string.
- Drop the steel ball down the drill pipe.
- Make up the kelly.
- Turn on the circulating pumps and while maintaining high pressure circulation, rotate the string slowly to the right and lower it until approximately two tons of weight rest against the bottom of the hole. Stop rotation and circulation and pull the junk basket from the hole.

Accessories

Mill Shoes:

Reverse circulation junk baskets are furnished with a standard type A mill shoe or type C mill shoe (figure 22). Both are used to mill up junk during fishing operation.

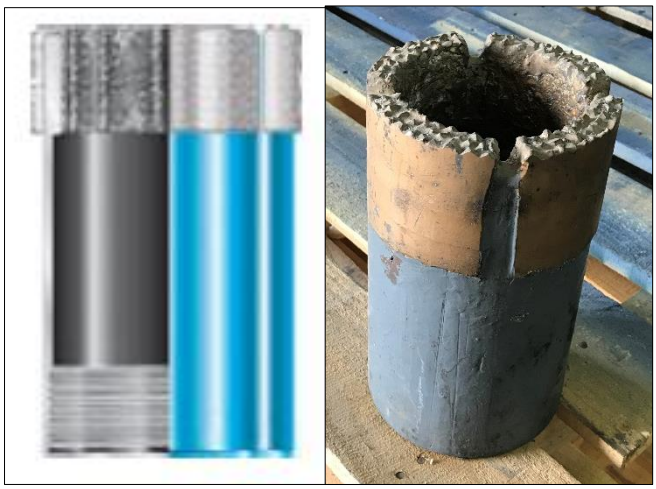

Figure 22
Type C Mill Shoe

Finger Shoes:

When junk is lying loose on the bottom of the well or when junk is too large to pass through the catchers, a finger shoe (figure 23) may be installed on the bottom of the barrel in place *of* the mill shoe. When the junk basket engages the fish, combined rotating and lowering cause the long fingers to close in beneath the fish and retain it in the barrel.

Figure 23
Finger Shoe

Aramco Stock

The following table lists Aramco stock of the common used RCJBs:

RCJB OD	Hole size range
3 5/8	3 7/8 to 5’’
5 1/8	5 5/8 to 6’’
5 ¾	6 1/8 to 6 ½
7 7/8	8 3/8 to 9 ½
11	11 ¾ to 12 ½
15	16 to 17 ½

Fishing Magnet

Ferrous metallic junk can often be retrieved using a fishing magnet, a powerful permanent magnet having passageways for circulation (figure 24).

Figure 24
Fishing Magnet

The magnet is encased on top and sides by a nonmagnetic brass sleeve to prevent junk from clinging to the side of the magnet. A skirt on the bottom of the magnet keeps the junk from being knocked off during the trip out. If there is no fill on top of the fish, magnets can also be run on wireline, a much faster operation than tripping the drill string in and out. Fishing magnets are available in different sizes and they are capable of pulling fish up to 3000 pounds.

Application

Fishing magnets are used to retrieve all types of small objects having magnetic attraction from bore hole bottoms. Such undrillable objects as bit cones, bearings, slips, tong pins, and milling cuttings can often be retrieved only by magnetic attraction.

Operation

- Make up the fishing magnet.
- RIH to the top of the fish.
- Stop one foot prior to tagging.
- Start circulation to wash the bottom of the well.
- Lower the fishing magnet and tag the fish.
- Pick up and repeat the steps a second time.
- Pick up off bottom.
- Stop the pumps and POOH (no rotation and no pumping).

Aramco Stock

The table on the right lists Aramco stock sizes of fishing magnets.

Fishing Magnet Size
3 ½
4
4 ½
5
6
7
10 ½
11 ½
16

BHA DESIGN

A typical fishing assembly consists of a combination of two assemblies, fishing and jarring (figure 25):

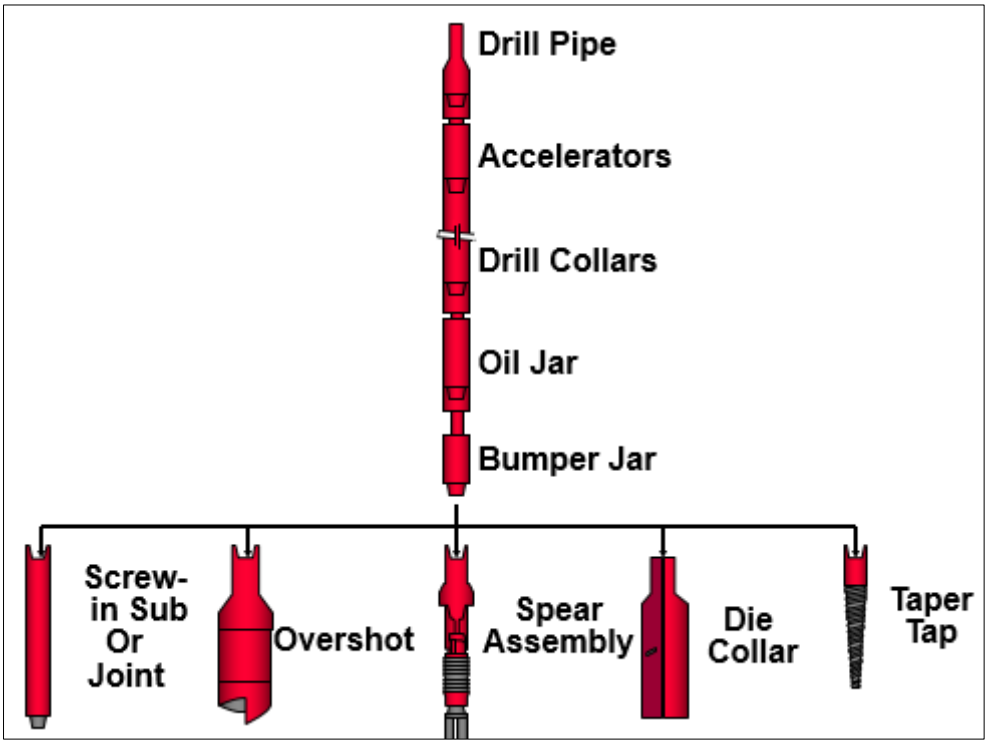

Figure 25 Fishing and Jarring Assemblies

- Fishing assembly will include one of the followings based on application: Overshot, box tap, spear, die collar, or taper tap.

- Jarring assembly will consists of bumper sub/jar, oil jar, drill collars, and accelerator.

Accessories

The BHA accessories may include impression block and safety joint.

Impression Block

Impression blocks (figure 26), used in fishing operations, consist of a soft lead insert in the lower end of a steel housing. They help the operator determine the configuration of the top of the fish and to locate its position in the well bore. Its use enables the operator to more precisely assess the fishing conditions and to more accurately select the proper tool or tools needed to successfully complete the fishing operation.

Figure 26
Impression Blocks

Operation

- Lower the impression block into the well on the lower end of the fishing string.
- After the impression block reaches the top of the fish, the weight of the string is further lowered (never rotate).
- Continue until contact with the fish, which indents into the soft lead lower end of the impression block.
- Withdraw the fishing string from the well, the impression in the lead will reveal the condition and shape of the fish.

Aramco Stock

The following table lists the Aramco stock for impression block sizes:

Impression Block Size
3 7/8
5 7/8
6
8
8 ½
12 ¼

Safety Joint

A safety joint allows quick release from fishing strings when they become stuck, leaving a minimum of pipe in the hole. This reduces the problems of fishing or sidetracking by the ability of reengagement. The safety joint has a rugged coarse thread design which will not loosen or wedge during operation. Once in the string, the safety joint is resistant to vibration, heavy loads and left or right hand torque. The tool will disengage by simple left hand rotation at approximately 40% of the tool's right-hand make-up torque.

Components

The safety joint consists of an upper pin section, a lower box section and two seals (figure 27). The upper pin section has a box connection up for connecting to the tool joint and a male coarse thread down for connection to the box section. The box section has a female coarse thread matching the male thread of the pin section and has a tool joint pin connection down for connecting to the pipe.

The coarse thread design of the pin and box sections allows speed and ease of engagement. When the safety joint is made up tightly, the joining coarse threads grip each other securely, pulling the surfaces into complete contact and therefore, form the safety joint into a rigid unit.

The pin section is grooved at the top and bottom to accommodate the O-ring type seals which seal the safety joint from both internal and external fluid pressures. Both seals are rated for high pressure operation, capable of with-standing up to 10,000 psi in continuous service.

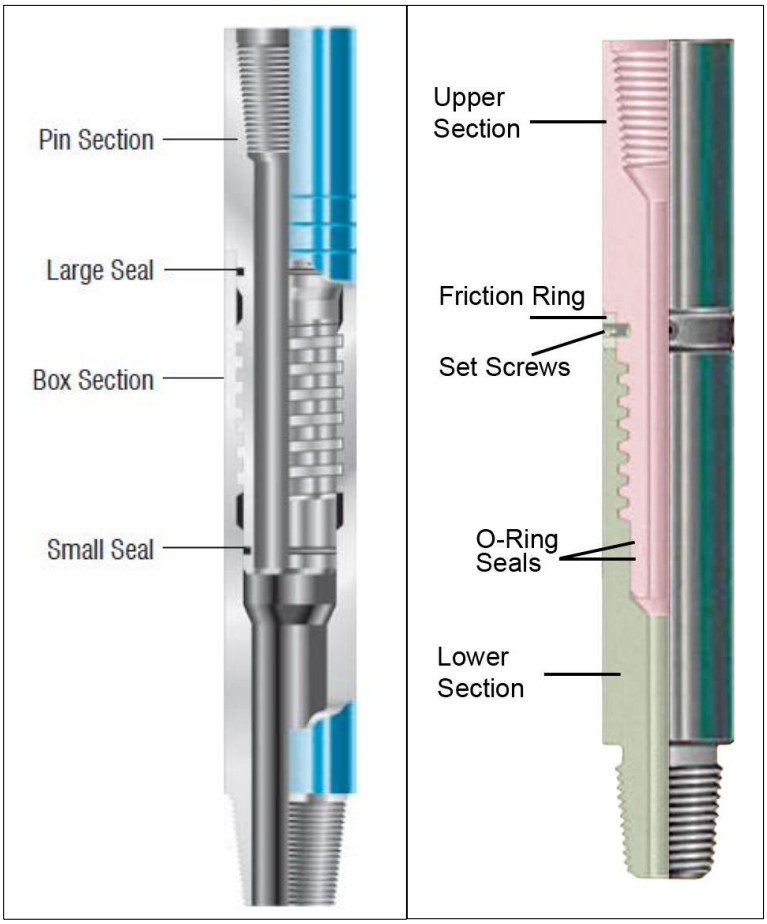

Figure 27 Safety Joint

Operation

- Examine the pin section to ascertain that the top and bottom seals are in good condition and are properly installed in the grooves.
- Thoroughly lubricate the coarse thread surfaces of the pin section and the box section.
- Make up the pin and box sections by hand.
- Position the safety joint immediately above the grappling or fishing tool.
- Screw the tool joint pin of the safety joint into the joint box of the pipe and make it up as an ordinary tool joint.

- With one tong on the box section and one tong on the pin section, make up the safety joint to the same degree of tightness as the tool joints in the string.
- Screw the pin end of the next stand of pipe into the box of the safety joint and make it up similarly to an ordinary tool joint connection and run the pipe into the hole.

To Disengage the Safety Joint in the Hole:

1. To break the connection, rotate the string to the left at 40 percent of the tools right hand make-up torque one turn in straight or shallow holes, two or three turns in deep or directional holes.
2. Pick up the string until at least 1,000 lbs of weight, but not more than 2,000 lbs, remains on the safety joint. If more than 2,000 lbs is applied, the safety joint will release but the possibility of damage to the shoulder at the point of disengagement exists.
3. Pick the string up slowly while rotating to the left to unscrew the safety joint. As the coarse threads unscrew, they will lift the pipe approximately 1/2 inch per revolution.
4. During the releasing of the Safety Joint, the pipe weight will decrease. The rig crew should be careful to maintain the pipe weight at 1,000 lbs but not more than 2,000 lbs as noted in step 2 above.

To Reengage the Safety Joint in the Hole:

1. Lower the string into the hole until the pin section contacts the box section.
2. Carefully apply one point of weight and rotate slowly to the right. An increase in torque will indicate that the safety joint has reengaged.

EXERCISE B

Directions: *Choose the correct response for the following questions:*

1. Name the four numbered components in below fishing spear.

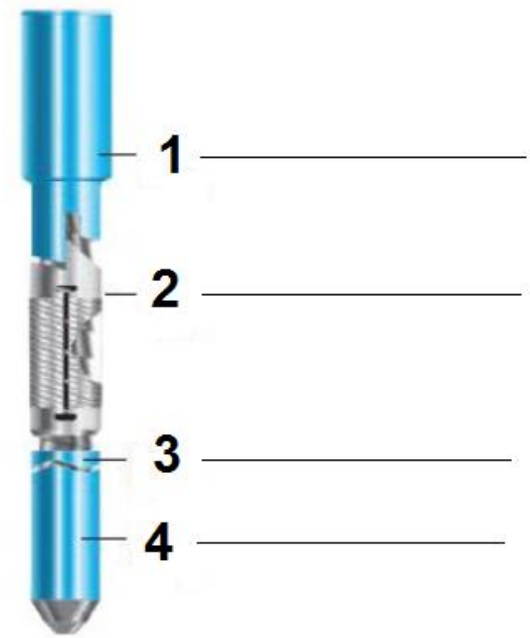

2. A spear with part number 9681, what is the grapple number to match and spear OD?

a. Grapple number is 9682 and spear OD is 4-1/32
b. Grapple number is 9682 and spear OD is 4
c. Grapple number is 9683 and spear OD is 5
d. Grapple number is 17477 and spear OD is 4-1/32

3. A well TAG-3419 was drilled to 9585' MD, TOL is 2181', and 7'' shoe is at 6689'. The TOF is 3500. The fish is 4 ½ TBG parted in the middle and the TBG is stuck. Select the best fishing tools to be run as first option?

a. 5 5/8 S.H OVERSHOT
b. 5 ¾ F.S OVERSHOT with near catch size to 4 ½ TBG
c. 5 ¾ F.S OVERSHOT with 4 ½ GRAPPLE
d. 5 5/8 F.S OVERSHOT with near catch size to 4 ½ TBG

4. A bit was pulled out of a vertical well, but one cone is lost in the well. What is the first fishing tool to be considered the best for this situation?

a. Fishing magnet
b. Reverse circulation junk basket
c. Overshot
d. Taper tap

5. Select the correct BHA for an overshot run?

a. Overshot, bumper sub, accelerator, drill pipe, and fishing jar
b. Overshot, bumper sub, fishing jar, drill pipe, and accelerator
c. Overshot, bumper sub, fishing jar, drill collars, and accelerator
d. Overshot , fishing jar, bumper sub, drill pipe, and accelerator

PART 3	**OBJECTIVE 3**

Describe Milling Tools Types, Applications, and Operation

If the top of the broken-off pipe is badly split and twisted, the damaged metal must be removed by milling to make a firm catch. Milling operations involves:

- Washover pipe
- Weight and speed
- Milling fluids
- Mills

WASHOVER PIPE

Washover pipe (figure 28) is large pipe made of heavy wall, N-80-grade casing cut into 40 feet lengths for handling ease, with FJWP threads for good torqueing and strength characteristics. A washover operation is actually a drilling procedure, so the pipe is subjected to high torque. As rule of thumb the max number of washover pipe length in open hole is 350 ft and 500 ft in cased hole.

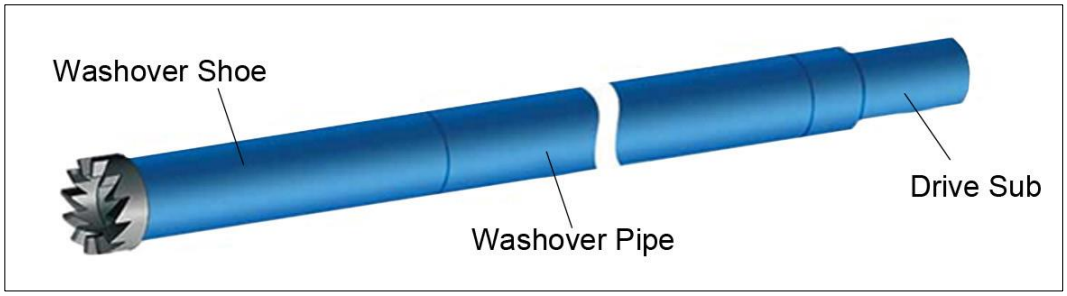

Figure 28
Washover Pipe & Accessories

The washover pipe is a fishing accessory that goes over the outside of stuck tubing or drill pipe and cleans the annular space from cuttings that have caused the piping to be stuck. A washover pipe and rotary shoe are used to rotate over the fish to remove annular material that may be causing it to stick and free up a section of stuck pipe so that it may be retrieved.

The cutting edge of the washover string is provided by any of a variety of rotary shoes, also called burn shoes, made of high-grade steel and having surfaces of tungsten carbide (figure 29).

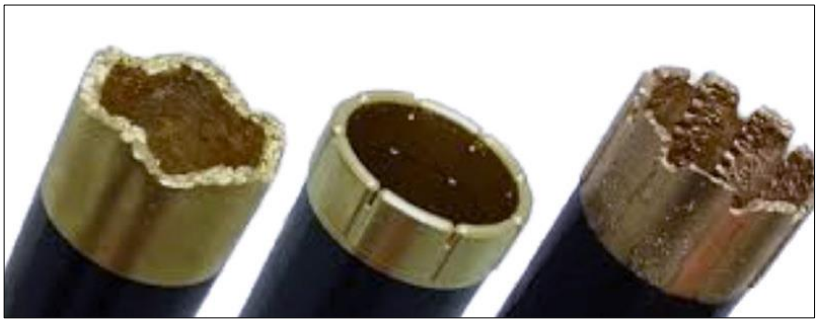

Figure 29
Rotary/Burn Shoes

Application

Washover pipe is used to drill out, wash out, and circulate out cement, fill, formation, packers or other debris causing the fish to stick. Proper size selection in washover operations is critical. The washpipe's ID must be large enough to go over the fish, with clearance for circulation. The OD must allow rotation in the hole or casing. To avoid sticking the washpipe, its annular clearance must be sufficient for circulation and prevention of over torqueing.

A typical washover string (figure 30) includes a top bushing (sub) or safety joint, several joints (up to 500 feet) of washover pipe, and a rotary shoe. If the washover pipe sticks, the safety joint permits easy release and recovery of the fishing string, back-off connector, and any washed-over fish from the hole.

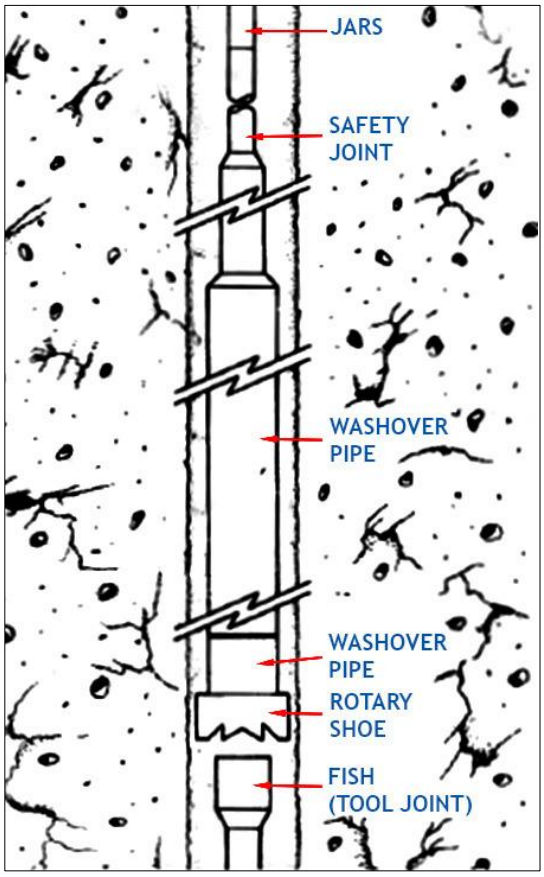

Figure 30
Typical Washover String

Components

When washover pipes are requested, the Toolhouse usually sends a washover pipe handling box which consist of 2-3 burn shoes, 2 drive subs, a washover pipe elevator and lifting nipples with the requested number of washover pipes (figure 31).

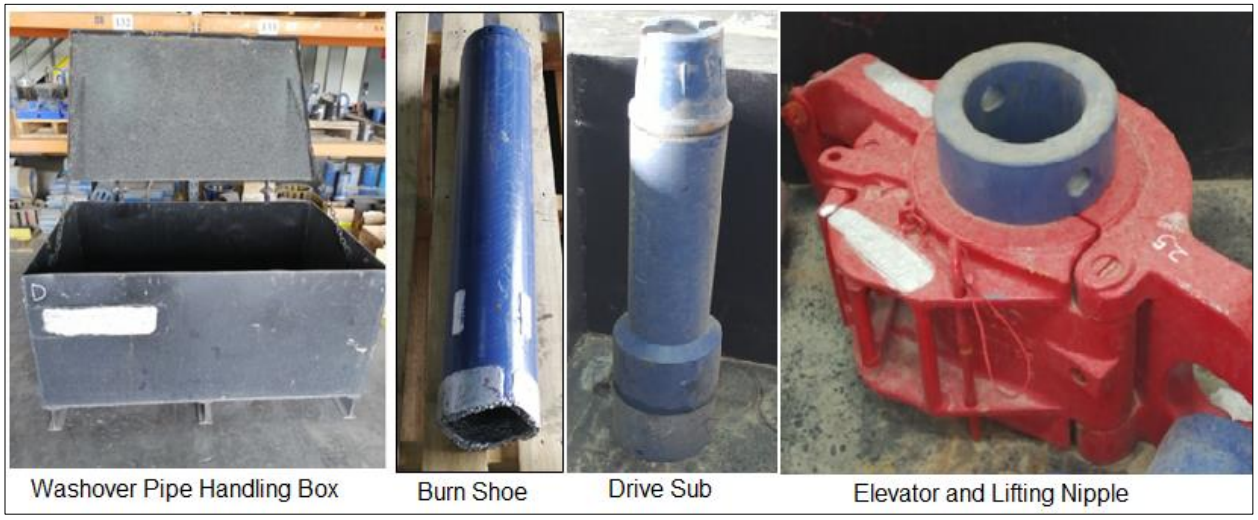

Figure 31
Toolhouse Washover Pipe Package

Operation

- Make up the washover string, burn shoe, number of washover pipes and top sub.
- Lower the washover string into the well until the burn shoe is a few feet above the top of the fish.
- Start the pumps and circulate the hole until the top of the fish is clean.
- While milling, the penetration rate is affected by the hole condition, the rotary speed, the weight of the drill string upon the milling shoe, the weight and viscosity of the drilling fluid, the dimensional size of the milling shoe, and finally the size and hardness of the material to be milled. Based on all of these variables, the optimum weight and RPM cannot be stated to obtain the most efficient penetration rate. Therefore the most efficient weight and RPM must be determined by actual operating conditions. Revolutions may vary from 75 to 150 RPM. Washover

operations should begin at a moderate speed and low weight, increasing both until the desired or optimum penetration rate is attained.

- Stop rotation and circulation every 20 to 30 feet to check for torque buildup and friction in the washover string. If torque becomes too great, it may be necessary to come out of the hole and remove part of the washover pipe.

Aramco Stock

The following table lists the Aramco stock for washover pipe box sizes:

Washover Pipe Box
5 ¾
8 1/8

WEIGHT AND SPEED

Usually the most efficient rotary speeds are obtained by running the rotary at 80 to 100 RPM (figure 32). Milling with washover shoes is an exception; they are usually more efficient when run at 60 to 80 RPM.

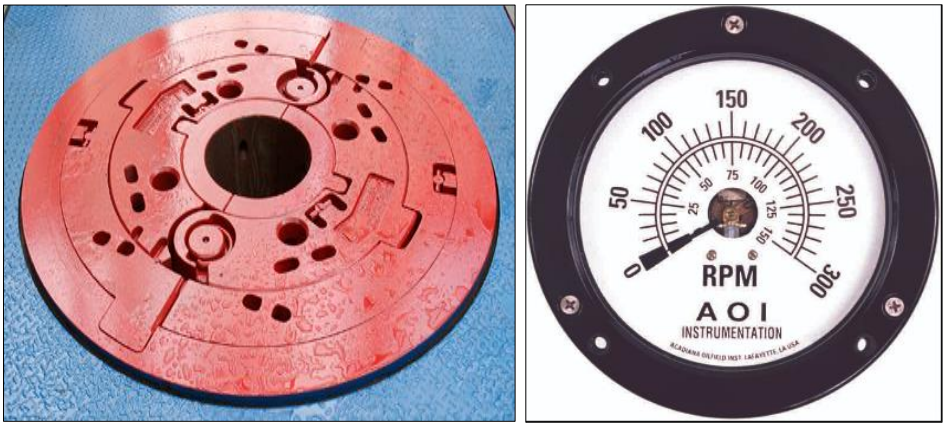

Figure 32
Rotary & RPM Dial

High speed can burn or damage the tungsten carbide, which is critical to milling steel. Tungsten carbide cuts steel best at 3000 to 4000 surface inches per minute*.

*Surface inch per minute is defined as the number of linear inches that a location on a rotating component travels in one minute.

The following formula determines the recommended rule of thumb minimum and maximum milling RPMs:

MIN or MAX RPM = Surface Speed/(Tool OD x 3.14)

For example, for a 12 in. mill:

Min RPM= 3,000/(12 x 3.14) = 80 RPM

Max RPM = 4,000/(12 x 3.14) = 106 RPM

For optimum milling rates, it will be necessary to try different rotary speeds, weights, and pump pressures. When the milling rate goes down, varying one or more of the above variables might be required to attain the desired milling rate. Occasionally spudding on the fish might help. If the milling rate cannot be increased to what it should be by varying some of the above mentioned variables or by light spudding, the mill might need to be pulled out of the hole because the hardfacing might be worn off.

Milling rates in Surface Feet per Minute (SFPM or SFM) for crushed carbide mills is 150 to 200 SFPM, and for carbide insert mills is 150 to 300 SFPM.

Milling Rate SFPM = Mill Diameter X RPM X 0.262

Example: Mill Dia = 7", RPM = 120, what is the milling rate in SFPM?

Milling Rate = 7" Mill X 120 RPM X 0.262 = <u>220 SFPM</u>

To convert from SFPM to RPM:

RPM = (SFPM ÷ Dia Mill) X 3.82

Example: (220 SFPM ÷ 7" Mill) X 3.82 = 120 RPM

MILLING FLUIDS

Fluids used for milling operations typically have a higher yield point and low shear rheology in order to lift the milled steel cuttings from the well. Milled cuttings have a specific gravity of 7.0 - 8.0 compared to common drilled cuttings S.G. of 2.5. Mud density can be increased using salts, ground marble or barite depending on mud type and requirements. Yield points of 50 - 90 and low shear rheology (6/3 rpm) of 40/30 minimum are typical required specifications for optimum efficiency.

Types of Milling Fluids

These include:

- Bentonite based mud
- LSND polymer drilling fluid
- Specialized milling fluids
- Oil based mud (OBM)

Bentonite Based Mud

Typical bentonite based drilling mud enhanced with XC Polymer for increased yield point and 6/3 rpm rheology for hole cleaning. It can be used after milling to drill to next casing point depending on critical mud properties required for the section to be drilled and can be discarded after use.

LSND Polymer Drilling Fluid

Viscous milling fluid can be used for drilling ahead if filtrate control is acceptable. YP of the fluid can be reduced to the range of 20 to 30 lb/100ft^2 after milling is finished and the hole is clean. Optional to circulate and condition mud to accepted properties with dilution/thinners prior to drilling ahead. If more than a casing window is milled, it usually is not recommended to continue drilling in the reservoir due to fine Iron solids generated during milling remaining in the mud increasing potential for formation damage.

Specialized Milling Fluids

Mixed Metal Hydroxide or Mixed Metal Silicate muds are considered good milling fluids due to high carrying capacity. For example, two muds of this type are available from vendors (Baroid's (Max-Dril) and Baker Hughes Drilling Fluids' (PolyVis)). Specific formulations and guidelines can be requested from the vendors. These muds are very sensitive to chemical contamination which can cause them to lose rheology

Oil Based Mud (OBM)

OBM is not recommended for milling operations due to high lubricity which reduces friction of the mill. If OBM is required due to logistics, cost, etc., maintain typical critical drilling properties during milling operations with elevated low shear yield point by addition of extra oil mud gellant and low shear rheology modifiers. Circulate and condition mud to drilling parameters prior to drilling ahead.

Hole Cleaning

Circulate and condition mud to achieve recommended properties prior to starting milling operation. Monitor properties on a regular basis. Calculate and monitor hole cleaning parameters including cuttings slip velocity, annular velocities and sweep results and report daily. Adjust fluid properties as needed to ensure good hole cleaning.

Monitor shaker returns for milled cuttings returns to evaluate hole cleaning performance. Monitor and clean ditch magnets placed in the trough below the shakers on a regular basis. Hole sweeps should be pumped at least every 6-8 hours unless the hole conditions or hole angle dictates greater frequency. Sweep volume should be large enough to cover

200 - 500 ft of largest annular volume. Run additional back to back sweeps to achieve desired results when hole cleaning problems are indicated. One sweep will probably not be sufficient to remedy an existing problem.

Pump a sweep with pipe rotation while circulating bottoms up before tripping and another when back on bottom. Pipe rotation and reciprocation greatly assist in mechanically agitating sweeps for better removal.

Synthetic Polypropylene Fiber enhanced sweeps are highly recommended for milling operations. Synthetic Fiber at 0.25- 0.5 lb/bbl in a sweep covering 200 feet of the largest annulus is recommended.

When milling is complete, mix and pump a sweep recommended for your hole angle and follow with a different sweep when the first is out of the hole, (fiber sweep is recommended), with pipe rotation and monitor shakers for results.

Use the table below when circulating bottoms-up prior to tripping. Complete removal of a sweep and associated cuttings from a well is dependent on hole size and inclination.

Deviation	**Circulation Factor**		
	17-1/2" and 16 "	12-1/4"	8 1/2" - 3 7/8"
Vertical	1.5 x Bottoms Up	1.3 x Bottoms Up	1.3 x Bottoms Up
10- 30°	1.7 x Bottoms Up	1.4 x Bottoms Up	1.4 x Bottoms Up
30 - 60°	2.5 x Bottoms Up	1.8 x Bottoms Up	1.6 x Bottoms Up
60 - 90°	3.0 x Bottoms UP	2.0 x Bottoms Up	1.7 x Bottoms UP

Notes:

- Hole sweeps can unload high volumes of cuttings from a well during milling and cause packing off or flowline plugging. Monitor pump pressure and slow pump rate as needed when circulating out a sweep.
- Utilizing salt as a water-soluble weighting material up to 75-pcf will reduce the amount of the insoluble barite needed to reach the 100-pcf mud density needed. Minimizing the suspended solids will allow faster milling rate.
- In water based mud, the viscosity and yield point can be reduced with water dilution or thinners if required to maintain acceptable pump pressure.
- No oil or mud lubricants should be added to the system to insure maximum friction and milling action.
- Utilize the finest shaker screens possible to handle the thick mud.
- Maintain annular velocities of 100 - 150 ft/minute in the annulus. Monitor hole cleaning hydraulics with the best available software or calculate the slip velocity of average cuttings and adjust annular velocities accordingly.
- Plan tubular design to allow for minimal pressure drops and annular clearance to assist in achieving high annular velocities.
- Consider utilizing tools with bypass valves if necessary, which will allow higher pump rates at casing tops and will allow pumping of sweep enhancing products such as Synthetic Fibrous materials.
- It is advantageous to use milling tools that produce relatively small, thin, plate-like swart with a low weight and large surface area to weight ratio. Spiral cut swart has a lower settling velocity and is thus easier to clean out of a well, however, problems can occur with 'birds nesting" of this cut of swart.
- Utilize "ditch magnets" with regular cleaning maintenance to trap metal shavings that pass through the shakers. Ditch magnets must be placed downstream of the shakers not in the possum belly.

- Hole angles above 40° can cause milled cuttings to settle rapidly to the low side of the well. Hole angles from 40 - 60° are the most difficult to clean effectively.
- Milling fluids are relatively inexpensive and can be discarded after use or saved for 2 - 3 months for re-use in future milling operations with addition of corrosion inhibitors before storage

High Viscosity Pills - Recommended for hole angles < 35°.

High Density Pills - Usually mixed at 15 - 30 pcf above circulating system mud weight. The buoyancy effect of the higher density will increase the carrying capacity of the mud. Do not use a high density pill alone if it is likely to cause lost circulation. Consider formations, ECO and frac gradient. Normal to slightly decreased pump rates are recommended for pumping weighted sweeps. As a rule of thumb, if the end of the sweep is less than 4 pcf over the original mud weight (at the flowline), the sweep was probably too short or too light or both.

Tandem pill consisting of 30 - 50 bbls base fluid (water, oil, or synthetic), followed by a weighted pill (weighted to 15 - 30 pcf over the active mud weight). The weight should be as high as feasible, taking into consideration rig limitations and exposed formations. The pills must be pumped in transitional or turbulent flow for maximum benefit and to prevent high-side channeling by the low viscosity pill. Prior to pumping, the effect on the hydrostatic head and the resultant well bore stability should be carefully examined. The low viscosity pill in turbulent flow will scour cuttings into the main annular flow path. The weighted pill with its increased buoyancy will help in lifting the disturbed cuttings out of the hole when they fall out of the low viscosity pill.

Pills enhanced with 'Fiber' - Fibrous materials are strongly recommended for milling operations. They function by the process of particle interference or entangling the milled cuttings for more efficient removal. Amine treated wood fibers and shredded nylon are two common products in use. The Synthetic Polypropylene Fiber has been used and accounted for over 200% increase in cuttings removal per sweep compared to sweeps without the material. Use at concentrations of 0.1 - 0.5 lbs/bbl in a pill of active mud.

MILLING

"Milling" means to cut, grind, pulverize, or break down metal into smaller particles. These particles are then circulated up the annulus. Mills are used to cut objects that either fall into the hole or get stuck and require removal from the hole or can mill away entire casing sections. Mills are normally built with high quality tungsten carbide called hardfacing.

Hardfacing material is composed of crushed sintered tungsten carbide particles compounded with a matrix of nickel-silver alloy. Hardfacing is applied with oxygen acetylene welding equipment.

Mill Types

Saudi Aramco has long list of mills in different sizes to accommodate several applications of milling operation. The following covers seven types of mills.

Junk Mills

Junk mills (figure 33) are used to mill away metal objects in the hole that cannot be retrieved with grappling tools or junk baskets. These mills are the toughest mills and referred to as workhorses of downhole milling operations. The blade forms of all junk baskets are designed so that they hold the junk in place to be milled under the milling face. Therefore the mill continuously cuts rather than sweeping the junk ahead of the blades. The junk mills selected should be 1/8 to ¼ in. less than the minimum inside diameter of the casing or open hole through which it is to be run. Run a junk sub directly above the mill. Have a minimum of 10,000 lbs. of drill collar weight available.

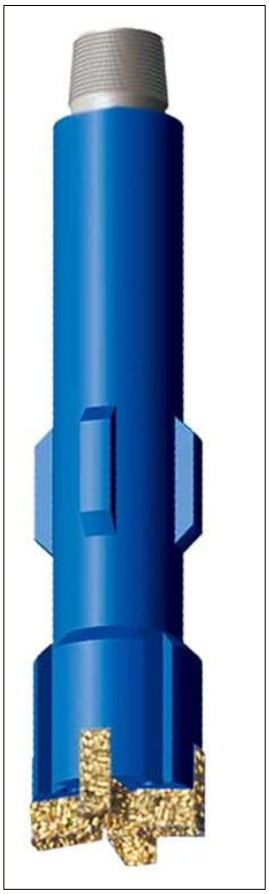

Figure 33
Junk Mill

Frequent spudding may be required to break up loose junk, this action will pound the junk down into the bottom, positioning it better for effective milling. Never allow a piece of junk to lodge next to the mill. Force it down by spudding the mill. A noticeable increase in torque will indicate that junk is alongside.

Special Design Junk Mill

Saudi Aramco and Weatherford have designed an 8 bladed junk mill (figure 34) with a 3-deg lay back on the cutters and a ½ in. offset nose from the center (in the 12-in. size). This mill has proven to be very reliable when milling up drillpipe. It can be used with a skirt on the outside to protect the casing when milling drillpipe inside casing.

Figure 34
Special Design Junk Mill

Round Nose Mills

Round nose mills (figure 35) are used primarily to mill out the bottom of liners or casing which have been set with a bull plug during original completion. Round nose mills cut on the leading edge or nose, along the taper but not full circumference of the mill.

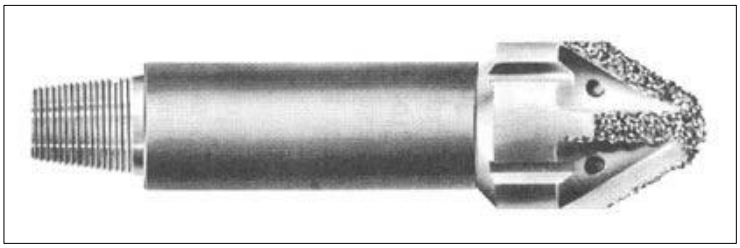

Figure 35
Round Nose Mill

Taper Mills

Taper mills (figure 36) are used primarily to mill collapsed pipe, to restore elliptical pipe to full bore, and to remove restrictions from the inside diameter such as landing seats, bushings, and other metal objects that might restrict the well bore. Taper mills have cutting structures along the taper.

Figure 36
Taper Mill

Flat Bottom Mills

Flat bottom mills (figure 37) are used to mill bits' cones and other pieces of junk if they cannot be recovered by other means of recovery. Flat bottom mills normally have a flat face on the bottom to keep the junk centered under the mill.

Figure 37
Flat Bottom Mill

String Mills

String mills (figure 38) are used to open up tight spots in pipe, to enlarge and clean up a window cut in casing, or in some circumstances, to run in collapsed casing that has been partially opened up. With a guide below the mill, it will not go outside as is possible with a tapered mill.

Figure 38
String Mill

Pilot Bladed Insert Mills

Pilot bladed insert mills (figure 39) are a high performance mills used for milling casing, liners and tubing. The bladed design continuously indexes a new cutting surface during milling. The insert design produces small, uniform, and easy to handle cuttings. The blades are 18 in long for longer mill life. A pilot mill is run below the bladed insert mill to work as a guide inside the top of the fish. Both weight on mill and RPMs will be determined by penetration rate, torque and cutting removal. It is crucial to have a clean top of fish prior to milling with the bladed pilot insert mill assembly. Milling with these should be treated as a machining process rather than milling process. Once optimum weight and RPM is established it should be adhered to.

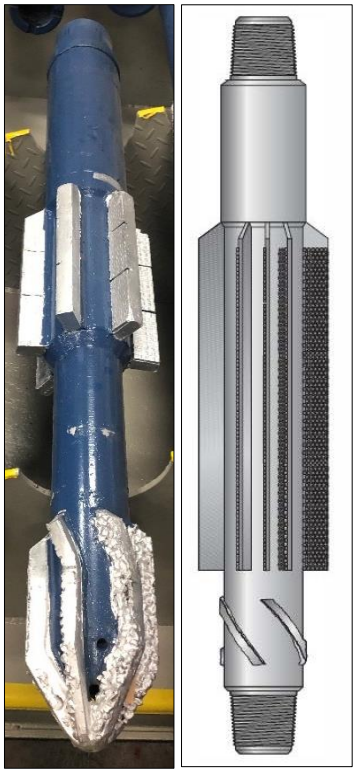

Figure 39
Pilot Bladed Insert Mills

Application

Milling tools are applicable to mill away a stuck fish that cannot be retrieved by conventional fishing methods or to dress top of the fish or mill out a section of casing. Since milling is usually a follow-up operation (after several fishing attempts), the fish to be milled should be familiar to the operator and therefore the selection of the milling tool should be relatively easy to determine, since the dimensional restrictions of the well should be known.

Operation

Most milling tools are simple to operate. Relatively fast rotary speeds should be available as well as drill pipe and drill collars. Rotary speeds may vary from 60 to 175 RPM. Higher rotary speeds are used with smaller diameter mills and slower RPM with larger mills. Rotary speeds are best determined in the field during operations, being dependent on the size and the type of mill, hole conditions and depth, and the material to be milled.

For maximum results, the mill should be run beneath a string of drill collars weighing anywhere between 10,000 and 15,000 lbs., depending on the size of the mill. Weight applied to the mill during operations like RPM, will vary due to the size and type of mill, hole condition and depth, and material to be milled.

The volume and characteristics of the cutting should be checked frequently since they will provide a great deal of information about the milling progress.

Best results are achieved with high volume pumps since high circulation rates will both flush and cool the milling surfaces and circulate the metal cuttings more efficiently to the surface. Annular velocity should be maintained at 80 to 120 ft. per minute. The mud weight and viscosity should be adequate to lift the metal cuttings to the surface.

EXERCISE C

Directions: *Choose the correct response for the following questions:*

1. Name the four numbered components below.

1 _____ 2 _____ 3 _____ 4 _____

2. Usually the most efficient rotary speeds are obtained by running the rotary at 80 to 100 RPM.

   True False

1. Select all Types of Milling Fluids?

a. LSND polymer drilling fluid
b. Oil based mud
c. Bentonite based mud
d. All of the above

3. What type of mill in this picture?

a. Concave mill
b. Flat bottom mill
c. Cobra mill
d. Taper mill

4. What kind of milling tools are used to open up tight spots in pipe, to enlarge and clean up a window cut in casing?

a. Taper mill
b. Flat bottom mill
c. String mill
d. Concave mill

PART 4	**OBJECTIVE 4**

Describe Cutting Tools Types, Applications, and Operation

Cutting tools include:

- Section mill
- Multi string cutter
- External cutters

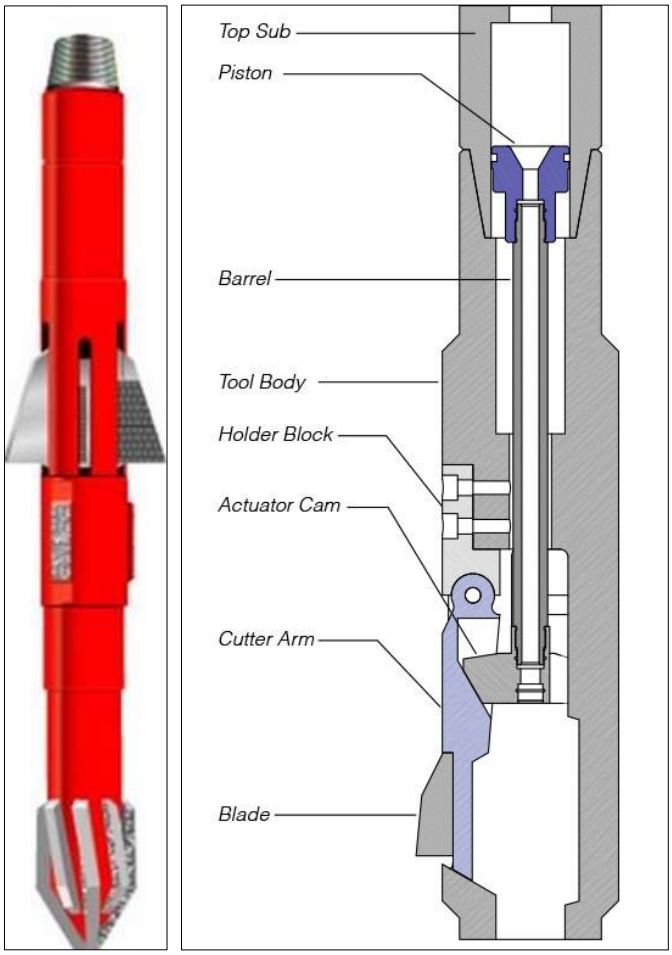

SECTION MILL

Section mills (figure 40) are hydraulically actuated tools that are used to mill a section of casing or tubing. Circulation through the tool creates a pressure drop across the piston. This forces a cam down, expanding the knives into contact with the casing. Cut out knives part the casings then all knives are used to mill. When circulation is stopped, the piston spring will lift the piston, withdrawing the cam from between the knives. The knives are now free to collapse back into the body and the tool can be retrieved.

Figure 40
Section Mill

It is important to insure that the mill completely cuts through the casing (cutting out) so the blades can be firmly seated on casing while milling. If you experience a sudden drop off of penetration rate of the mill, this may be attributed to a loose ring of steel from the casing coupling. This ring will rotate with the section mill. Lightly spudding the section mill should break up the ring.

Pump rates for the section mill are pre-determined and depend on the tool size, and section mill sizes. The correct GPM must be selected to produce the desired pressure drop through the section mill providing efficient tool operation. The most common cause of difficulty in cutting out is insufficient pressure at the tool. Approximately 300 psi is required to keep the cutting knives open and part the casing.

Application

Section mill may be applicable for cutting purposes only like to cut string of casing or can be used to cut a string of casing and milling out section of the casing for squeeze cement job or sidetrack the well.

Operation

Using K-Mill to Cut and Mill Section of a Casing

- Run in the hole to the desired depth of cut-out.
- Select correct GPM to produce the desired pressure drop through the K-Mill. Pump rates for the K-Mill are predetermined and depend on tool size.
- Start rotation at 60-80 RPM and build pressure slowly until cut-out GPM is achieved.
- Keep rotating until the pipe has been severed, as indicated by the approximately 200-250 psi pressure drop.
- After the cut has been completed, increase GPM to recommended milling flow rate.
- Start applying weight and increase the rotational speed to approximately 100-125 RPM. The most efficient weight range is normally 4,000 to 8,000 lbs.

- Once the section is milled or when the knives are worn out, circulate for 5-10 minutes.
- Pull the tool into the shoe and trip out in the conventional manner.

Using the K-Mill as a Pipe Cutter

- Pick up the tool and run in hole to cutting depth.
- Start rotary speed 80-100 RPM and note torque.
- Start pump slowly and increase volume and pressure until you notice a reaction at the rotary or torque increases significantly.
- Maintain a rotary speed of 80-100 RPM.
- When cut is complete, there is a definite indication of increase of mud in the annulus, lost return or excessive noise will indicate when the casing is parted.
- The loss of torque, decrease in pump pressure or both, are indications the cut has been completed.
- Shut off pumps.
- Stop rotary.
- Pull tool of the hole.

MULTI STRING CUTTER

The multi string cutter (figure 41) is designed to cut single string of pipe from 4" to 36" using pump pressure to actuate three Knives. Different lengths of knives are used, depending on the size of pipe to be cut. The cutter works on the principle of flow restriction across an orifice while cutting, and pressure drop when the pre-set diameter of the knives is reached. This tells the operator that the pipe has been severed.

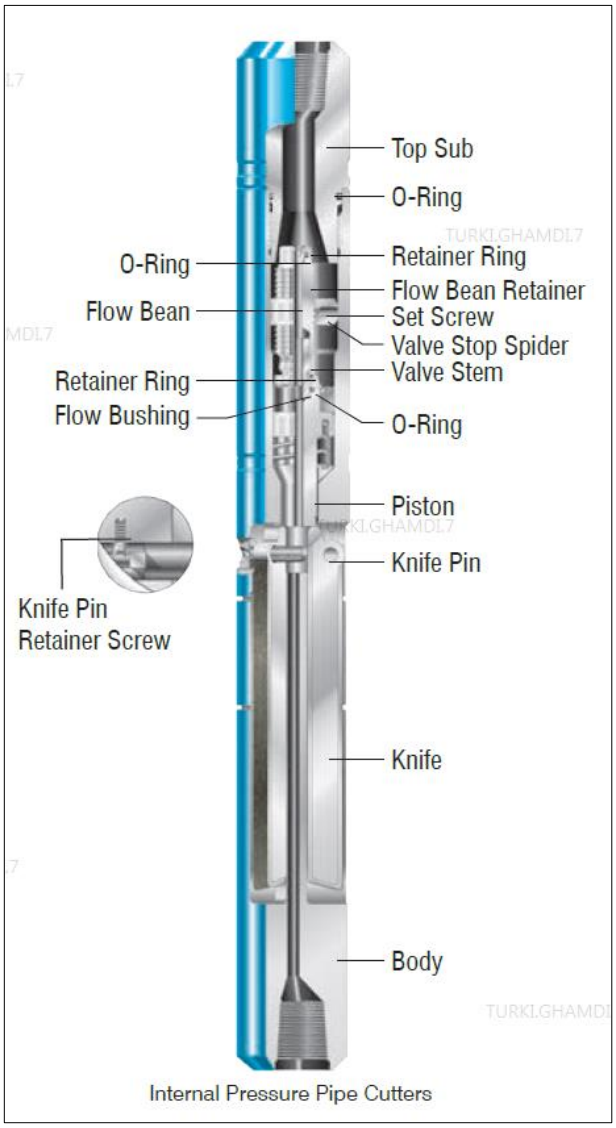

Figure 41
Multi String Cutter

Application

The multi string cutter is used when the operation requires cutting the string of casing due to well abandon or when the casing string gets stuck and the decision was made to cut the casing string at the free point and run in hole with fishing assembly for the fish.

Operation

To make a successful cut using the pressure pipe cutter, first, determine proper knife length for pipe to be cut and dress pipe cutter accordingly. Second, set correct RPM of rotary table. Third. Select mud pump pressure necessary for cut.

By running a drill bit in the bottom of the cutter and a non-rotating rubber stabilizer directly above the cutter, a smoother and more efficient cut can be achieved. In extreme cases cut may not be made without a stabilizer.

Cutting Procedure

Before starting the actual cut, be sure knives are not located at a casing coupling location. This will only complicate and prolong the cut. Once the tool is in cutting position, mark the kelly so that knives can be relocated if needed.

- Begin the cutting operation by starting the rotary and achieving recommended RPM.
- Zero weight indicator and note free torque of cutter string.
- Start mud pump and increase pressure as recommended.
- Continue cutting until knives reach the pre-set diameter, which will be indicated by a sharp drop in pump pressure.
- Release pump pressure and raise the string to remove the cutter from the hole.

Aramco Stock

Pipe cutter size
11’’
11 ¾

EXTERNAL CUTTERS

The external cutter is an automatic spring-fed pipe cutter that provides fast, efficient external cutting and recovery of long sections of pipe. Due to its automatic spring-fed feature it eliminates the inadvertent application of excessive strain being applied from the rig floor, preventing the knives from becoming burned or broken before the cut is made taking in consideration the weight and the length of pipe being cut.

Application

The external cutter is used to cut and to remove stuck pipe in long undamaged sections. It is used in conjunction with a washover string to make a well placed cut to remove the stuck pipe. External cutters are capable of cutting most types of struck drill pipe or tubing.

Components

The external cutter (figure 42) consists of a top sub, body, guide, knives, spring dog assembly thrust washer, thrust, bearing, preload sleeve, feed ring, main spring, and shear pins.

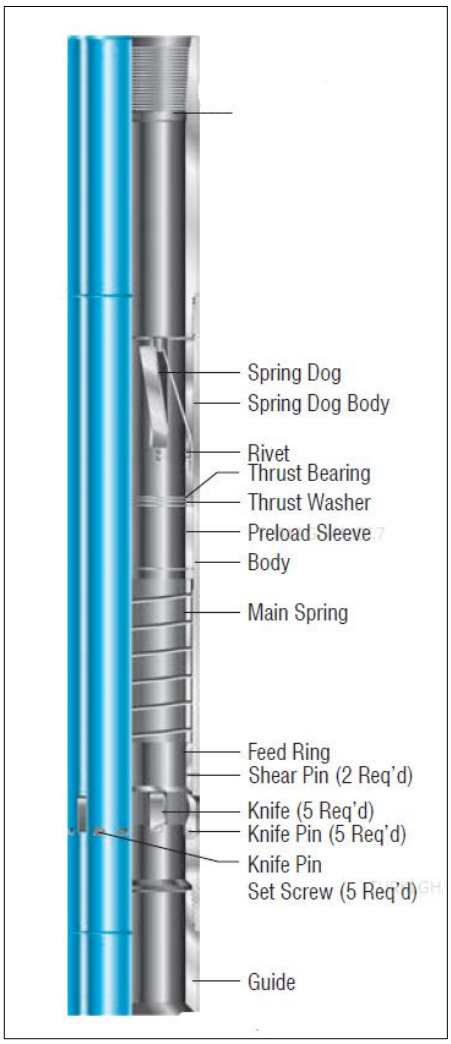

Figure 42
External Cutter

Operation

- Make up the external cutter to the bottom of the washover string and tighten all connections.
- Lower the cutting string into the well until the guide lip on the external cutter contacts and passes over the top of the fish.

- Lower the tool to the depth previously washed free.

Cutting Precautions

- When selecting the proper place to make the cut, it is recommended that the cut be made one joint above the lowest position to which the rotary washover shoe was run. This will leave, below the cutter, one joint of free pipe which will spring away from the wall and align itself in the cutter.

- After the kelly is made up in the string, and with circulation established at normal rate, the cutting string should be rotated to determine the amount of torque required to run the cutter, when the knives are not in contact with the fish. After the hole has been washed sufficiently and the cutter is rotating freely, the circulation and rotation must be stopped and the cutting string raised until the dog springs contact the next higher tool joint or coupling. In cutters using the slip sub-assembly, the slips contact the pipe at all times. Raising the cutter will shear the brass pins between the feed ring and the body above the knives and force the knives in against the fish.

- Care should be exercised not to run the circulation pumps so that pulsations are transmitted to the cutting string, as this will cause the knives to move up and down synchronous to the pulsations, resulting in an uneven cutting action.

- When starting rotation, the operator is cautioned to apply only a small amount of torque. If free rotation is not established at this point, the cutter should be lowered slightly until the string can be turned with a minimum of torque. Allow the cutter to rotate freely for a few minutes. Then stop the rotation, pick up the cutting string about 1/4" and again try rotation. If raising 1/4" does not change the amount of torque required, the raising and rotating should be repeated until increased torque is in evidence. This will tell the operator that the knives are cutting the pipe. From this time until the cut is complete, it is best to take every precaution against excessive torque.

- Sometimes, when the coupling or tool joint, under which the dog springs are engaged, is quite thin, the dog springs may rotate off the coupling shoulder before the cut is complete.

To prove a cut, the drill pipe string should first be raised 1" to 2" or until there is noticeable movement on the weight indicator. This being sufficient to lift the cut portion of the fish.

EXERCISE D

Directions: *Choose the correct response for the following questions:*

1. What type of cutting tool is used to cut a string of casing or can be used to cut a string of casing and milling out a section of the casing?

a. Section mill
b. Multi string cutter
c. External cutter
d. Hydraulic cutter

2. What do you need to determine to make a successful cut using the pressure pipe cutter?

a. Proper knife length
b. Proper RPM
c. Proper GPM
d. All of the above

3. Which cutting tool is used to go over a stuck tubular and retrieve it in the same run?

a. Section mill
b. Multi string cutter
c. External cutter
d. Hydraulic cutter

4. What is the name of this tool?

a. Section mill
b. Multi string cutter
c. External cutter
d. Hydraulic cutter